K-BKR EINTEILIG VA

Ball valves

Caractéristiques

Pression de service	max. 55 bar (depending on connection size and temperature)
Température de service	Max. 150 °C
Joint d'étanchéité	PTFE
Manette	Stainless steel 1.4301

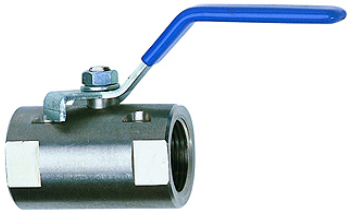

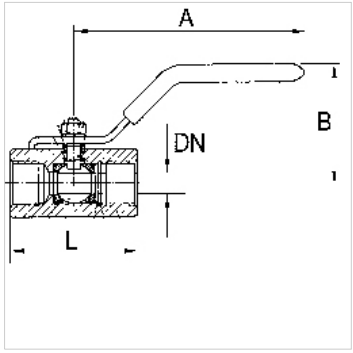

Remarque

G thread acc. to DIN EN ISO 228-1, with ISO flange plate (acc. to ISO 5211)
Autres informations sur demande.

Description

Full bore with G 1/4 to G 3/8, reduced bore with G 1/2 to G 2

Informations relatives à la commande

For use on devices that have to be vented whenever they are turned off, either because of safety regulations or for technical reasons. The pneumatic devices are disconnected from the system and simultaneously vented each time they are shut off.

Article

Désignation	DN	Filets	A (mm)	B (mm)	L (mm)	Matériau
K- 07 30 14 94	5	G 1/4	60,0	30,0	39,8	Stainless steel 1.4401/1.4408
K- 07 30 14 95	7	G 3/8	80,0	33,0	44,8	Stainless steel 1.4401/1.4408
K- 07 30 14 96	9	G 1/2	110,0	57,0	56,5	Stainless steel 1.4401/1.4408
K- 07 30 14 97	13	G 3/4	110,0	61,0	60,0	Stainless steel 1.4401/1.4408
K- 07 30 14 98	15	G 1	124,0	70,0	70,0	Stainless steel 1.4401/1.4408
K- 07 30 14 99	20	G 1 1/4	152,0	75,0	77,6	Stainless steel 1.4401/1.4408
K- 07 30 15 00	25	G 1 1/2	150,0	80,0	87,0	Stainless steel 1.4401/1.4408
K- 07 30 15 01	32	G 2	155,0	85,0	102,0	Stainless steel 1.4401/1.4408

En dépit du soin apporté aux vérifications, nous ne pouvons garantir une absence totale d'erreur et ne saurions être tenus responsables des indications contenues.