K-PRAEZI DRG DRUCKVER HANSA

Precision pressure regulators with continuous pressure supply

Caractéristiques

Pression d'entrée	Max. 16 bar
Plage de température	-10 °C to +50 °C
Médiums	Air comprimé
Filet de raccord	Material: Die-cast zinc
Boîtier	Material: Grivory® (PA 66)
Membrane	NBR
Consommation d'air interne	2.6 l/min at P2 = 6 bar (depending on secondary pressure)
Mesure de la valeur du débit	At P1 = 10 bar, P2 = 6.3 bar and pressure drop Δp = 1 bar



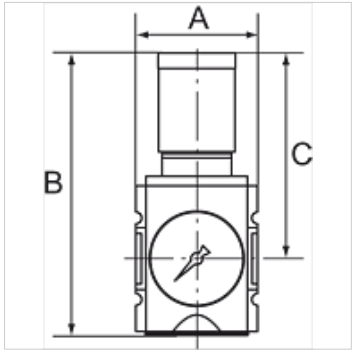

Remarque

Autres informations sur demande.

Description

Precision diaphragm pressure regulators with self-relieving design and excellent flow rates in modern design for mounting side by side.
By assembling two or more controllers together, it is possible to supply several working air circuits with different pressures via a single supply line.

Informations relatives à la commande

The price does not include a key lock. Please order separately.

Article

Désignation	Filets	Plage de régulation	Débit (L/min)	A (mm)	B	C (mm)
K- 07 25 09 66	G 1/4	0.1 - 1 bar	2200	52,0	128,5 mm	95,5
K- 07 25 09 67	G 1/4	0.1 - 2 bar	2200	52,0	128,5 mm	95,5
K- 07 25 09 68	G 1/4	0.2 - 4 bar	2200	52,0	128,5 mm	95,5
K- 07 25 09 69	G 1/4	0.5 - 8 bar	2200	52,0	128,5 mm	95,5
K- 07 25 09 70	G 1/4	0.5 - 10 bar	2200	52,0	128,5 mm	95,5
K- 07 25 09 71	G 3/8	0.1 - 1 bar	2700	52,0	128,5 mm	95,5
K- 07 25 09 72	G 3/8	0.1 - 2 bar	2700	52,0	128,5 mm	95,5
K- 07 25 09 73	G 3/8	0.2 - 4 bar	2700	52,0	128,5 mm	95,5
K- 07 25 09 74	G 3/8	0.5 - 8 bar	2700	52,0	128,5 mm	95,5
K- 07 25 09 75	G 3/8	0.5 - 10 bar	2700	52,0	128,5 mm	95,5
K- 07 25 09 76	G 3/8	0.1 - 1 bar	4300	63,0	149,5 mm	110,0
K- 07 25 09 77	G 3/8	0.1 - 2 bar	4300	63,0	149,5 mm	110,0
K- 07 25 09 78	G 3/8	0.2 - 4 bar	4300	63,0	149,5 mm	110,0
K- 07 25 09 79	G 3/8	0.5 - 8 bar	4300	63,0	149,5 mm	110,0
K- 07 25 09 80	G 3/8	0.5 - 10 bar	4300	63,0	149,5 mm	110,0
K- 07 25 09 81	G 1/2	0.1 - 1 bar	5000	63,0	149,5 mm	110,0
K- 07 25 09 82	G 1/2	0.1 - 2 bar	5000	63,0	149,5 mm	110,0
K- 07 25 09 83	G 1/2	0.2 - 4 bar	5000	63,0	149,5 mm	110,0
K- 07 25 09 84	G 1/2	0.5 - 8 bar	5000	63,0	149,5 mm	110,0
K- 07 25 09 85	G 1/2	0.5 - 10 bar	5000	63,0	149,5 mm	110,0

Accessoires

K-STECKSCHLOSS	Key lock

Pièces de rechange

K-HALTERBAUSATZ HANSA	Holder HANSA
K-SCHALTTAFELMUTTER HANSA	Nut HANSA
K-DICHTSATZ HANSA	Set of seals HANSA

En dépit du soin apporté aux vérifications, nous ne pouvons garantir une absence totale d'erreur et ne saurions être tenus responsables des indications contenues.