K-DRG DRVS MULTIFIX MINI

Pressure regulators with pressure supply at both ends

Caractéristiques

Pression d'entrée	Max. 16 bar
Température de fluide	max. 60 °C
Température ambiante	Max. 60 °C
Matériau étanche	NBR
Logement de ressort	POM-brass
Boîtier	Die-cast zinc
Mesure de la valeur du débit	At P1 = 8 bar, P2 = 6 bar and pressure drop Δp = 1 bar



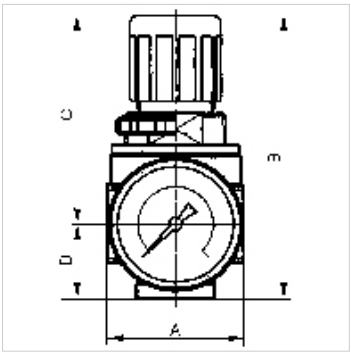

Remarque

Autres informations sur demande.

Description

Diaphragm pressure regulators with self-relieving design for mounting side by side. The pressure setting can be locked by pushing the button down.
By assembling two or more controllers together, it is possible to supply several working air circuits with different output pressures via a single supply line.

Informations relatives à la commande

The port for the output pressure (P2) is on the rear! K-07250028: G 1/8. Lockable pressure regulator: K-07250027. If several devices in the »multifix-mini« Series are assembled together, the maximum working pressure is 12 bar.

Article

Désignation	Filets	Plage de régulation	Débit (L/min)	A (mm)	B	C (mm)	D (mm)	DN	Gabarit
K- 07 25 00 28	G 1/4	0.1 - 3 bar	1200	40,0	85,0 mm	63,0	22,0	5	0
K- 07 25 00 29	G 1/4	0.2 - 6 bar	1200	40,0	85,0 mm	63,0	22,0	5	0
K- 07 25 00 27	G 1/4	0.5 - 10 bar	1200	40,0	85,0 mm	63,0	22,0	5	0

Pièces de rechange

K-HALTERBAUSATZ	Holder
K-SCHALTTAFELMUTTER	Nut
K-KOPPELPAKET MEHR	Coupling packet
K-VERSCHLEI-SATZ	Set of wearing parts

En dépit du soin apporté aux vérifications, nous ne pouvons garantir une absence totale d'erreur et ne saurions être tenus responsables des indications contenues.