K-HS RD

Unidirectional banjo valves, pneumatic release, port 2 with female thread

Caractéristiques

Pression de service	0.3 - 10 bar
Pression de commande	0.5 - 2.5 bar, depending on operating pressure
Température de fluide	max. 60 °C
Position de montage	Any. The ring piece must be positioned before the valve is tightened
Matériau	Laiton nickelé
Matériau étanche	Perbunan



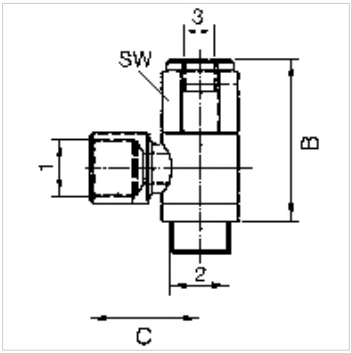

Remarque

Autres informations sur demande.

Description

For stopping and positioning the cylinder movement: If a control signal is present at port 3 (see drawing), air can flow to and from the cylinder. If no control signal is present, the cylinder exhaust air is shut off by the unidirectional valve.
The cylinder is stopped. Releasable unidirectional valves are screwed directly onto the cylinder instead of the normal pipe connections.

Article

Désignation	Port 1	Port 2	Raccord 3	B (mm)	C (mm)
K- 07 15 07 04	G 1/8	G 1/8	M 5	38,0	21,5
K- 07 15 07 03	G 1/4	G 1/4	G 1/8	43,0	25,4
K- 07 15 07 05	G 3/8	G 3/8	G 1/8	46,0	31,6
K- 07 15 07 02	G 1/2	G 1/2	G 1/8	52,0	32,0

En dépit du soin apporté aux vérifications, nous ne pouvons garantir une absence totale d'erreur et ne saurions être tenus responsables des indications contenues.