K-ZFL ABSP-KLAPPEN EINFACH

Butterfly valves, with single-acting actuator - spring to close, min. pilot pressure 5 bar

Caractéristiques

Construction	Pneumatic actuators, in double- or single acting version
Pression de service	Max. 16 bar
Température de service	-15 °C to +120 °C
Médiums	Water / steam, salt water, salt water, ester, ketone, alkali, caustic soda, sodium hydroxide. Not recommended for hydrocarbons
Pression de commande	5.5 bar
Adaptateur vanne	Supplied as standard, operated by a 3/2- or 5/2-way valve
Angle de rotation	90 °
Entraînement	aluminium eloxed
Étanchéité de l'entraînement	NBR
Boîtier	Grey cast iron GG25 epoxy resin coated, RAL 5015
Joint d'étanchéité	EPDM
Arbre	SS416
Étanchéité de l'arbre	EPDM
Commande	



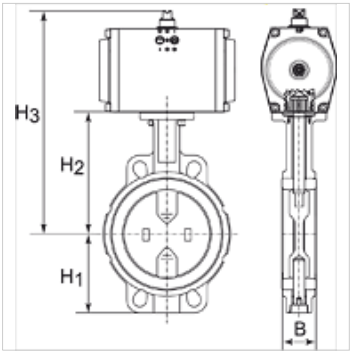

Remarque

Autres informations sur demande.

Article

Désignation	Rondelle	DN	B (mm)	H1 (mm)	H2 (mm)	H3 (mm)	L (mm)
K- 07 30 03 36	Stainless Steel CF8M/1.4404	40	38,0	68,0	108,0	238,0	94,0
K- 07 30 03 37	Stainless Steel CF8M/1.4404	50	47,0	71,0	143,0	273,0	100,0
K- 07 30 03 38	Stainless Steel CF8M/1.4404	65	49,0	78,0	155,0	285,0	115,0
K- 07 30 03 39	Stainless Steel CF8M/1.4404	80	47,0	89,0	162,0	292,0	127,0
K- 07 30 03 40	Stainless Steel CF8M/1.4404	100	56,0	102,0	178,0	348,0	163,0
K- 07 30 03 42	Stainless Steel CF8M/1.4404	125	59,0	123,0	191,0	361,0	190,0
K- 07 30 03 44	Stainless Steel CF8M/1.4404	150	59,0	138,0	265,0	395,0	216,0

En dépit du soin apporté aux vérifications, nous ne pouvons garantir une absence totale d'erreur et ne saurions être tenus responsables des indications contenues.