K-WTEH 2-TLG PC SCHU VARIOBLOC

Service units, 2-piece with polycarbonate bowl and bowl guard

Caractéristiques

Pression d'entrée	Max. 16 bar (polycarbonate bowl), Max. 20 bar (metal bowl)
Température de fluide	max. 50 °C
Température ambiante	Max. 50 °C (polycarbonate bowl), Max. 80 °C (metal bowl)
Largeur des pores de l'élément de filtre	40 µm
Matériau étanche	NBR
Logement de ressort	POM
Boîtier	Die-cast zinc
Membrane	NBR
Embout compte-goutte	PA
Drain valve	Manual
Mesure de la valeur du débit	At P1 = 10 bar, P2 = 6 bar and pressure drop Δp = 1 bar



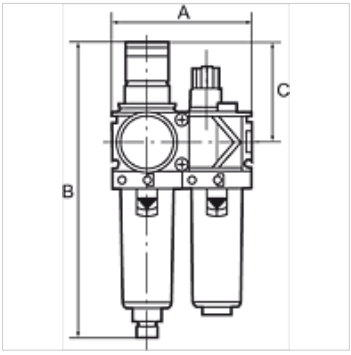

Remarque

Autres informations sur demande.

Description

Two or three-piece service units consisting of a reversible diaphragm pressure regulator, independent of inlet pressure, with self-relieving design, combined with a centrifugal separator and a proportional lubricator. Approved series in modern industrial design, with the following key benefits: Simple handling, Convenient modular assembly thanks to innovative fasteners, Excellent flow values.

Informations relatives à la commande

Service units are also available with bowl guard or metal bowl. Service units are also available in other control ranges (0.5 - 6 bar and 0.5 - 16 bar) and in lockable version. Please ask for more information.

Informations supplémentaires

Service units are also available with bowl guard or metal bowl. Service units are also available in other control ranges.

Article

Désignation	Filets	Plage de régulation	Débit (L/min)	A (mm)	B	C (mm)
K- 07 25 22 81	G 1/4	0.5 - 10 bar	1500	96,0	203,0 mm	68,0
K- 07 25 22 80	G 3/8	0.5 - 10 bar	1800	96,0	203,0 mm	68,0
K- 07 25 22 79	G 1/2	0.5 - 10 bar	3400	140,0	273,0 mm	98,0
K- 07 25 22 78	G 3/4	0.5 - 10 bar	5000	140,0	273,0 mm	98,0
K- 07 25 22 77	G 1	0.5 - 10 bar	5000	194,0	273,0 mm	98,0

En dépit du soin apporté aux vérifications, nous ne pouvons garantir une absence totale d'erreur et ne saurions être tenus responsables des indications contenues.