# UEM MG
Preturna matica MG

## Karakteristike

| | |
|---|---|
| **Priključak 1** | metrički navoji matice |
| **Izvedba** | Preturna matica |
| **Norma** | DIN 3870 |
| **Materijal** | Mjed |



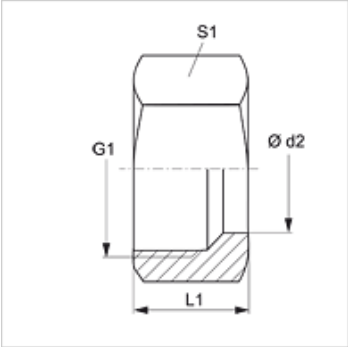


## Artikl

| Naziv | Serija | Ø d2 (mm) | G1 | L1 (mm) | S1 |
|---|---|---|---|---|---|
| **UEM 04 LL MG** | LL | 4 | M 8 x 1 | 11,0 | 10 |
| **UEM 05 LL MG** | LL | 5 | M 10 x 1 | 11,5 | 12 |
| **UEM 06 LL MG** | LL | 6 | M 10 x 1 | 11,5 | 12 |
| **UEM 08 LL MG** | LL | 8 | M 12 x 1 | 12,0 | 14 |
| **UEM 10 LL MG** | LL | 10 | M 14 x 1 | 12,5 | 17 |
| **UEM 12 LL MG** | LL | 12 | M 16 x 1 | 13,0 | 19 |
| | | | | | |
| **UEM NW 04 L MG** | L | 6 | M 12 x 1,5 | 14,5 | 14 |
| **UEM NW 06 L MG** | L | 8 | M 14 x 1,5 | 14,5 | 17 |
| **UEM NW 08 L MG** | L | 10 | M 16 x 1,5 | 15,5 | 19 |
| **UEM NW 10 L MG** | L | 12 | M 18 x 1,5 | 15,5 | 22 |
| **UEM NW 13 L MG** | L | 15 | M 22 x 1,5 | 17,0 | 27 |
| **UEM NW 16 L MG** | L | 18 | M 26 x 1,5 | 18,0 | 32 |
| **UEM NW 20 L MG** | L | 22 | M 30 x 2 | 20,0 | 36 |
| **UEM NW 25 L MG** | L | 28 | M 36 x 2 | 21,0 | 41 |
| **UEM NW 32 L MG** | L | 35 | M 45 x 2 | 24,0 | 50 |
| **UEM NW 40 L MG** | L | 42 | M 52 x 2 | 24,0 | 60 |
| | | | | | |
| **UEM NW 03 S MG** | S | 6 | M 14 x 1,5 | 16,5 | 17 |
| **UEM NW 04 S MG** | S | 8 | M 16 x 1,5 | 16,5 | 19 |
| **UEM NW 06 S MG** | S | 10 | M 18 x 1,5 | 17,5 | 22 |
| **UEM NW 08 S MG** | S | 12 | M 20 x 1,5 | 17,5 | 24 |
| **UEM NW 10 S MG** | S | 14 | M 22 x 1,5 | 20,5 | 27 |
| **UEM NW 13 S MG** | S | 16 | M 24 x 1,5 | 20,5 | 30 |
| **UEM NW 16 S MG** | S | 20 | M 30 x 2 | 24,0 | 36 |
| **UEM NW 20 S MG** | S | 25 | M 36 x 2 | 27,0 | 46 |
| **UEM NW 25 S MG** | S | 30 | M 42 x 2 | 29,0 | 50 |
| **UEM NW 32 S MG** | S | 38 | M 52 x 2 | 32,5 | 60 |

Serija: LL = veoma lagan  L = lagan  S = težak – PN = nazivni tlak  PB = maks. radni tlak – Ø d2 = vanjski promjer cijevi

## Varijante proizvoda

| | |
|---|---|
| **UEM** | Preturna matica, Čelik |
| **UEM VA** | Preturna matica, VA, Oplemenjeni čelik |

*Usprkos pažljivoj provjeri ne mogu se isključiti pogreške i zbog toga ne preuzimamo odgovornost za sadržane podatke.*