GAM VA
Navrtni vijčani spoj

HANSA-FLEX

Karakteristike

Priključak 1	metrički unutarnji navoj, cilindrični
Oblik brtve 1	Profil A
Priključak 2	metrički vanjski navoji, cilindrični
Oblik brtve 2	24° unutarnji konus
Izvedba	Navrtni vijčani spoj
Oblik izrade	ravno
Norma	DIN 2353 ISO 8434-1
Opseg isporuke	Nastavak s preturnom maticom i nareznim prstenom
Materijal	Oplemenjeni čelik



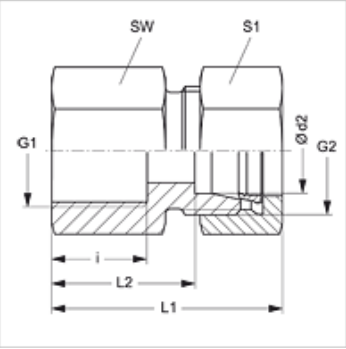

Napomena

Upute za montažu, ugradnju, tlačno opterećenje i dopuštene radne temperature pronaći ćete u tehničkim informacijama za vijčane spojeve cijevi.

Artikl

Naziv	Serija	Radni tlak bari	Ø d2 (mm)	G1	G2	i (mm)	L1 (mm)	L2 (mm)	SW (mm)	S1
GAM NW 04 HL VA	L	PN 315	6	M 10 x 1	M 12 x 1,5	12,5	34,5	19,5	14	14
GAM NW 06 HL VA	L	PN 315	8	M 12 x 1,5	M 14 x 1,5	17,5	39,0	24,0	17	17
GAM NW 08 HL VA	L	PN 315	10	M 14 x 1,5	M 16 x 1,5	17,0	40,0	25,0	19	19
GAM NW 10 HL VA	L	PN 315	12	M 16 x 1,5	M 18 x 1,5	17,0	41,0	26,0	22	22
GAM NW 10 HL 18 VA	L	PN 315	12	M 18 x 1,5	M 18 x 1,5	17,0	41,0	26,0	22	22
GAM NW 13 HL VA	L	PN 315	15	M 18 x 1,5	M 22 x 1,5	17,0	42,0	27,0	24	27
GAM NW 16 HL VA	L	PN 315	18	M 22 x 1,5	M 26 x 1,5	19,0	45,0	28,5	27	32
GAM NW 20 HL VA	L	PN 160	22	M 26 x 1,5	M 30 x 2	21,0	50,0	33,5	32	36
GAM NW 25 HL VA	L	PN 160	28	M 33 x 2	M 36 x 2	24,0	53,0	36,5	41	41
GAM NW 32 HL VA	L	PN 160	35	M 42 x 2	M 45 x 2	26,0	60,0	38,5	50	50
GAM NW 40 HL VA	L	PN 160	42	M 48 x 2	M 52 x 2	28,0	63,0	40,0	55	60
GAM NW 03 HS VA	S	PN 630	6	M 12 x 1,5	M 14 x 1,5	17,0	41,0	26,0	17	17
GAM NW 04 HS VA	S	PN 630	8	M 14 x 1,5	M 16 x 1,5	17,0	41,0	26,0	19	19
GAM NW 06 HS VA	S	PN 630	10	M 16 x 1,5	M 18 x 1,5	17,0	43,0	26,5	22	22
GAM NW 08 HS VA	S	PN 630	12	M 18 x 1,5	M 20 x 1,5	17,0	43,0	26,5	24	24
GAM NW 08 HS 20 VA	S	PN 400	12	M 20 x 1,5	M 20 x 1,5	19,0	49,0	31,0	27	24
GAM NW 10 HS VA	S	PN 630	14	M 20 x 1,5	M 22 x 1,5	19,0	49,0	31,0	27	27
GAM NW 13 HS VA	S	PN 400	16	M 22 x 1,5	M 24 x 1,5	19,0	49,0	30,5	30	30
GAM NW 16 HS VA	S	PN 400	20	M 27 x 2	M 30 x 2	22,0	56,0	34,5	36	36
GAM NW 20 HS VA	S	PN 400	25	M 33 x 2	M 36 x 2	24,0	61,0	37,0	41	46
GAM NW 25 HS VA	S	PN 400	30	M 42 x 2	M 42 x 2	26,0	68,0	41,5	55	60
GAM NW 32 HS VA	S	PN 250	38	M 48 x 2	M 52 x 2	28,0	74,0	43,0	60	60

Serija: LL = veoma lagan L = lagan S = težak – PN = nazivni tlak PB = maks. radni tlak – Ø d2 = vanjski promjer cijevi

Varijante proizvoda

GAM	Navrtni vijčani spoj, Čelik
XGAM VA	Navrtni vijčani spoj, Oplemenjeni čelik

Usprkos pažljivoj provjeri ne mogu se isključiti pogreške i zbog toga ne preuzimamo odgovornost za sadržane podatke.