RIL
Dvostazna redukcija, duga

HANSA-FLEX

Karakteristike

Priključak 1	BSP vanjski navoj, cilindrični
Oblik brtve 1	Profil B
Priključak 2	BSP unutarnji navoj, cilindrični
Izvedba	Dvostazna redukcija
Oblik izrade	duga
Norma	DIN 2353 ISO 8434-1
Materijal	Čelik
Površinska zaštita	galvanski premaz

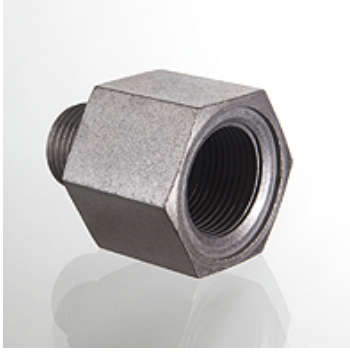

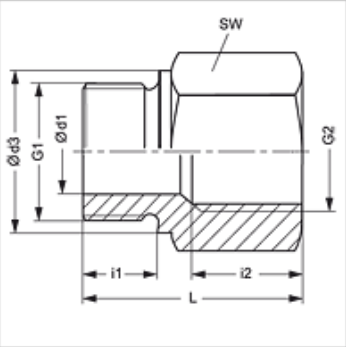

Napomena

Upute za montažu, ugradnju, tlačno opterećenje i dopuštene radne temperature pronaći ćete u tehničkim informacijama za vijčane spojeve cijevi.

Artikl

Naziv	Radni tlak bari	Ø d1 (mm)	G1	G2	Ø d3 (mm)	i1 (mm)	i2 (mm)	L (mm)	SW (mm)
RIL NW 03 06	PN 400	4	G 1/8" - 28	G 1/4" - 19	14	8	17,0	31,0	19
RIL NW 03 10	PN 400	4	G 1/8" - 28	G 3/8" - 19	14	8	17,0	32,0	24
RIL NW 06 03	PN 400	5	G 1/4" - 19	G 1/8" - 28	18	12	12,0	28,0	19
RIL NW 06 06	PN 400	5	G 1/4" - 19	G 1/4" - 19	18	12	17,0	35,0	19
RIL NW 06 10	PN 400	5	G 1/4" - 19	G 3/8" - 19	18	12	17,0	36,0	24
RIL NW 06 13	PN 400	5	G 1/4" - 19	G 1/2" -14	18	12	20,0	40,0	27
RIL NW 06 20	PN 315	5	G 1/4" - 19	G 3/4" -14	18	12	22,0	43,0	36
RIL NW 10 06	PN 400	8	G 3/8" - 19	G 1/4" - 19	22	12	17,0	36,0	22
RIL NW 10 10	PN 400	8	G 3/8" - 19	G 3/8" - 19	22	12	17,0	35,5	24
RIL NW 10 13	PN 400	8	G 3/8" - 19	G 1/2" -14	22	12	20,0	41,0	27
RIL NW 10 20	PN 315	8	G 3/8" - 19	G 3/4" -14	22	12	22,0	44,0	36
RIL NW 13 10	PN 315	12	G 1/2" -14	G 3/8" - 19	26	14	17,0	36,0	27
RIL NW 13 13	PN 315	12	G 1/2" -14	G 1/2" -14	26	14	20,0	42,0	27
RIL NW 13 20	PN 315	12	G 1/2" -14	G 3/4" -14	26	14	22,0	46,0	36
RIL NW 13 25	PN 315	12	G 1/2" -14	G 1" -11	26	14	24,5	49,0	41
RIL NW 13 32	PN 160	10	G 1/2" -14	G 1,1/4" - 11	26	14	26,5	53,0	55
RIL NW 20 13	PN 315	16	G 3/4" -14	G 1/2" -14	32	16	20,0	41,0	32
RIL NW 20 20	PN 315	16	G 3/4" -14	G 3/4" -14	32	16	22,0	46,0	36
RIL NW 20 25	PN 315	16	G 3/4" -14	G 1" -11	32	16	24,5	51,0	41
RIL NW 20 32	PN 160	16	G 3/4" -14	G 1,1/4" - 11	32	16	26,5	55,0	55
RIL NW 20 40	PN 160	16	G 3/4" -14	G 1,1/2" - 11	32	16	28,5	57,0	60
RIL NW 25 20	PN 315	20	G 1" -11	G 3/4" -14	39	18	22,0	47,0	41
RIL NW 25 32	PN 160	20	G 1" -11	G 1,1/4" - 11	39	18	26,5	57,0	55
RIL NW 25 40	PN 160	20	G 1" -11	G 1,1/2" - 11	39	18	28,5	59,0	60
RIL NW 32 25	PN 160	25	G 1,1/4" - 11	G 1" -11	49	20	24,5	52,0	50
RIL NW 32 40	PN 160	25	G 1,1/4" - 11	G 1,1/2" - 11	49	20	28,5	60,0	60
RIL NW 40 32	PN 160	32	G 1,1/2" - 11	G 1,1/4" - 11	55	22	26,5	58,0	55
RIL NW 50 40	PN 160	40	G 2" -11	G 1,1/2" - 11	68	24	28,5	62,0	70

PN = nazivni tlak PB = maks. radni tlak

Varijante proizvoda

RIL MG	Dvostazna redukcija, duga, Mjed
RIL VA	Dvostazna redukcija, duga, Oplemenjeni čelik

Usprkos pažljivoj provjeri ne mogu se isključiti pogreške i zbog toga ne preuzimamo odgovornost za sadržane podatke.