XRT VA

Redukcijski vijčani spoj, T oblik

HANSA-FLEX

Karakteristike

vodoravno Priključak 1 - 3	metrički vanjski navoji, cilindrični
Oblik brtve 1 - 3	24° unutarnji konus
Izvedba	Redukcijski vijčani spoj
Oblik izrade	T oblik
Norma	ISO 8434-1
Opseg isporuke	Nastavak (bez preturne matice i nareznog prstena)
Materijal	Oplemenjeni čelik



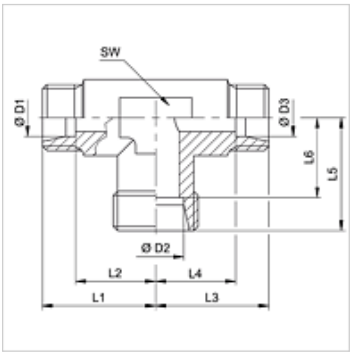

Napomena

Upute za montažu, ugradnju, tlačno opterećenje i dopuštene radne temperature pronaći ćete u tehničkim informacijama za vijčane spojeve cijevi.

Artikl

Naziv	Serija	Radni tlak bari	D1 (mm)	D2 (mm)	D3 (mm)	L1 (mm)	L2 (mm)	L3 (mm)	L4 (mm)	L5 (mm)	L6 (mm)	SW (mm)
XRT NW 04 06 04 HL VA	L	PN 400	6	8	6	21,0	14,0	21,0	14,0	21,0	14,0	14
XRT NW 04 08 04 HL VA	L	PN 400	6	10	6	22,0	15,0	22,0	15,0	22,0	15,0	14
XRT NW 06 04 06 HL VA	L	PN 400	8	6	8	21,0	14,0	21,0	14,0	21,0	14,0	14
XRT NW 06 08 06 HL VA	L	PN 400	8	10	8	22,0	15,0	22,0	15,0	22,0	15,0	14
XRT NW 06 10 06 HL VA	L	PN 400	8	12	8	24,0	17,0	24,0	17,0	24,0	17,0	17
XRT NW 08 04 08 HL VA	L	PN 400	10	6	10	22,0	15,0	22,0	15,0	22,0	15,0	14
XRT NW 08 06 08 HL VA	L	PN 400	10	8	10	22,0	15,0	22,0	15,0	22,0	15,0	14
XRT NW 08 08 04 HL VA	L	PN 400	10	10	6	22,0	15,0	22,0	15,0	22,0	15,0	14
XRT NW 08 10 08 HL VA	L	PN 400	10	12	10	24,0	17,0	24,0	17,0	24,0	17,0	19
XRT NW 08 13 08 HL VA	L	PN 400	10	15	10	28,0	21,0	28,0	21,0	28,0	21,0	19
XRT NW 10 04 10 HL VA	L	PN 400	12	6	12	24,0	17,0	24,0	17,0	24,0	17,0	17
XRT NW 10 06 06 HL VA	L	PN 400	12	8	8	24,0	17,0	24,0	17,0	24,0	17,0	17
XRT NW 10 06 10 HL VA	L	PN 400	12	8	12	24,0	17,0	24,0	17,0	24,0	17,0	17
XRT NW 10 08 08 HL VA	L	PN 400	12	10	10	24,0	17,0	24,0	17,0	24,0	17,0	17
XRT NW 10 08 10 HL VA	L	PN 400	12	10	12	24,0	17,0	24,0	17,0	24,0	17,0	17
XRT NW 10 10 08 HL VA	L	PN 400	12	12	10	24,0	17,0	24,0	17,0	24,0	17,0	17
XRT NW 10 13 10 HL VA	L	PN 400	12	15	12	28,0	21,0	28,0	21,0	28,0	21,0	19
XRT NW 10 16 10 HL VA	L	PN 315	12	18	12	31,0	24,0	31,0	24,0	31,0	23,5	24
XRT NW 13 04 13 HL VA	L	PN 400	15	6	15	28,0	21,0	28,0	21,0	28,0	21,0	19
XRT NW 13 06 13 HL VA	L	PN 400	15	8	15	28,0	21,0	28,0	21,0	28,0	21,0	19
XRT NW 13 08 13 HL VA	L	PN 400	15	10	15	28,0	21,0	28,0	21,0	28,0	21,0	19
XRT NW 13 10 10 HL VA	L	PN 400	15	12	12	28,0	21,0	28,0	21,0	28,0	21,0	19
XRT NW 13 10 13 HL VA	L	PN 400	15	12	15	28,0	21,0	28,0	21,0	28,0	21,0	19
XRT NW 13 13 10 HL VA	L	PN 400	15	15	12	28,0	21,0	28,0	21,0	28,0	21,0	19
XRT NW 16 06 16 HL VA	L	PN 315	18	8	18	31,0	23,5	31,0	23,5	31,0	24,0	24
XRT NW 16 08 08 HL VA	L	PN 315	18	10	10	31,0	23,5	31,0	24,0	31,0	24,0	24
XRT NW 16 08 16 HL VA	L	PN 315	18	10	18	31,0	23,5	31,0	23,5	31,0	24,0	24
XRT NW 16 10 16 HL VA	L	PN 315	18	12	18	31,0	23,5	31,0	23,5	31,0	24,0	24
XRT NW 16 13 16 HL VA	L	PN 315	18	15	18	31,0	23,5	31,0	23,5	31,0	24,0	24
XRT NW 16 16 08 HL VA	L	PN 315	18	18	10	31,0	23,5	31,0	24,0	31,0	23,5	24
XRT NW 20 08 20 HL VA	L	PN 315	22	10	22	35,0	27,5	35,0	27,5	35,0	28,0	27
XRT NW 20 10 20 HL VA	L	PN 315	22	12	22	35,0	27,5	35,0	27,5	35,0	28,0	27
XRT NW 20 13 13 HL VA	L	PN 315	22	15	15	35,0	27,5	35,0	28,0	35,0	28,0	27
XRT NW 20 13 20 HL VA	L	PN 315	22	15	22	35,0	27,5	35,0	27,5	35,0	28,0	27
XRT NW 20 16 16 HL VA	L	PN 315	22	18	18	35,0	27,5	35,0	27,5	35,0	27,5	27
XRT NW 20 16 20 HL VA	L	PN 315	22	18	22	35,0	27,5	35,0	27,5	35,0	27,5	27
XRT NW 20 20 16 HL VA	L	PN 315	22	22	18	35,0	27,5	35,0	27,5	35,0	27,5	27
XRT NW 25 08 25 HL VA	L	PN 250	28	10	28	38,0	30,5	38,0	30,5	38,0	31,0	36
XRT NW 25 10 25 HL VA	L	PN 250	28	12	28	38,0	30,5	38,0	30,5	38,0	31,0	36
XRT NW 25 13 25 HL VA	L	PN 250	28	15	28	38,0	30,5	38,0	30,5	38,0	31,0	36
XRT NW 25 16 25 HL VA	L	PN 250	28	18	28	38,0	30,5	38,0	30,5	38,0	30,5	36
XRT NW 25 20 20 HL VA	L	PN 250	28	22	22	38,0	30,5	38,0	30,5	38,0	30,5	36
XRT NW 25 20 25 HL VA	L	PN 250	28	22	28	38,0	30,5	38,0	30,5	38,0	30,5	36
XRT NW 32 10 32 HL VA	L	PN 160	35	12	35	45,0	34,5	45,0	34,5	45,0	38,0	41
XRT NW 32 20 32 HL VA	L	PN 250	35	22	35	45,0	34,5	45,0	34,5	45,0	37,5	41
XRT NW 32 25 32 HL VA	L	PN 250	35	28	35	45,0	34,5	45,0	34,5	45,0	37,5	41

Usprkos pažljivoj provjeri ne mogu se isključiti pogreške i zbog toga ne preuzimamo odgovornost za sadržane podatke.

XRT VA
Redukcijski vijčani spoj, T oblik

HANSA-FLEX

Artikl

Naziv	Serija	Radni tlak bari	D1 (mm)	D2 (mm)	D3 (mm)	L1 (mm)	L2 (mm)	L3 (mm)	L4 (mm)	L5 (mm)	L6 (mm)	SW (mm)
XRT NW 40 16 40 HL VA	L	PN 160	42	18	42	51,0	40,0	51,0	40,0	51,0	43,5	50
XRT NW 40 20 40 HL VA	L	PN 160	42	22	42	51,0	40,0	51,0	40,0	40,0	48,0	50
XRT NW 40 25 40 HL VA	L	PN 160	42	28	42	51,0	40,0	51,0	40,0	49,0	41,5	50
XRT NW 06 03 06 HS VA	S	PN 630	10	6	10	25,0	17,5	25,0	17,5	25,0	18,0	17
XRT NW 08 03 08 HS VA	S	PN 630	12	6	12	24,5	17,0	24,5	17,0	24,0	17,0	17
XRT NW 08 04 04 HS VA	S	PN 630	12	8	8	29,0	21,5	29,0	22,0	29,0	22,0	17
XRT NW 08 04 08 HS VA	S	PN 630	12	8	12	29,0	21,5	29,0	21,5	29,0	22,0	17
XRT NW 08 06 08 HS VA	S	PN 630	12	10	12	29,0	21,5	29,0	21,5	29,0	21,5	17
XRT NW 08 13 08 HS VA	S	PN 400	12	16	12	33,0	25,5	33,0	25,5	33,0	24,5	24
XRT NW 10 06 10 HS VA	S	PN 630	14	10	14	30,0	22,0	30,0	22,0	30,0	22,5	19
XRT NW 13 03 13 HS VA	S	PN 400	16	6	16	33,0	24,5	33,0	24,5	33,0	26,0	24
XRT NW 13 04 13 HS VA	S	PN 400	16	8	16	33,0	24,5	33,0	24,5	33,0	26,0	24
XRT NW 13 06 13 HS VA	S	PN 400	16	10	16	33,0	24,5	33,0	24,5	33,0	25,5	24
XRT NW 13 08 13 HS VA	S	PN 400	16	12	16	33,0	24,5	33,0	24,5	33,0	25,5	24
XRT NW 13 16 13 HS VA	S	PN 400	16	20	16	37,0	28,5	37,0	28,5	37,0	26,5	27
XRT NW 16 06 16 HS VA	S	PN 400	20	10	20	37,0	26,5	37,0	26,5	37,0	29,5	27
XRT NW 16 08 16 HS VA	S	PN 400	20	12	20	37,0	26,5	37,0	26,5	37,0	29,5	27
XRT NW 16 10 16 HS VA	S	PN 400	20	14	20	37,0	26,5	37,0	26,5	37,5	29,5	27
XRT NW 16 13 16 HS VA	S	PN 400	20	16	20	37,0	26,5	37,0	26,5	37,0	28,5	27
XRT NW 16 20 16 HS VA	S	PN 400	20	25	20	42,0	31,5	42,0	31,5	42,0	30,0	36
XRT NW 20 06 20 HS VA	S	PN 400	25	10	25	42,0	30,0	42,0	30,0	42,5	35,0	36
XRT NW 20 13 20 HS VA	S	PN 400	25	16	25	42,0	30,0	42,0	30,0	42,0	33,5	36
XRT NW 20 16 20 HS VA	S	PN 400	25	20	25	42,0	30,0	42,0	30,0	42,0	31,5	36
XRT NW 20 25 20 HS VA	S	PN 400	25	30	25	49,0	37,0	49,0	37,0	49,0	35,5	41
XRT NW 25 13 25 HS VA	S	PN 400	30	16	30	49,0	35,5	49,0	35,5	49,0	40,5	41
XRT NW 25 16 25 HS VA	S	PN 400	30	20	30	49,0	35,5	49,0	35,5	49,0	38,5	41
XRT NW 25 20 25 HS VA	S	PN 400	30	25	30	49,0	35,5	49,0	35,5	49,0	37,0	41
XRT NW 32 20 32 HS VA	S	PN 315	38	25	38	57,0	41,0	57,0	41,0	57,0	45,0	50
XRT NW 32 25 32 HS VA	S	PN 315	38	30	38	57,0	41,0	57,0	41,0	57,0	43,5	50

Serija: LL = veoma lagan L = lagan S = težak – PN = nazivni tlak PB = maks. radni tlak – D1, D2, D3 = vanjski promjer cijevi – TGL = M 27 x 2

Varijante proizvoda

XRT	Redukcijski vijčani spoj, T oblik, Čelik
RT VA	Redukcijski vijčani spoj, T oblik, Oplemenjeni čelik

Usprkos pažljivoj provjeri ne mogu se isključiti pogreške i zbog toga ne preuzimamo odgovornost za sadržane podatke.