VN
Uvrtni vijčani spoj

HANSA-FLEX

Karakteristike

Priključak 1	NPT vanjski navoji
Oblik brtve 1	brtvljenje navoja
Priključak 2	metrički vanjski navoji, cilindrični
Oblik brtve 2	24° unutarnji konus
Izvedba	Uvrtni vijčani spoj
Oblik izrade	ravno
Norma	DIN 2353 ISO 8434-1
Opseg isporuke	Nastavak s preturnom maticom i nareznim prstenom
Materijal	Čelik
Površinska zaštita	galvanski premaz



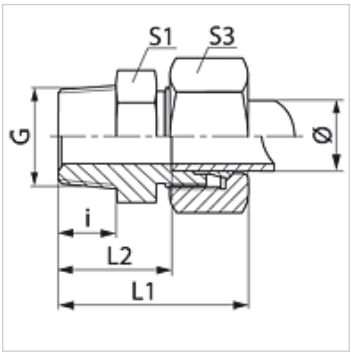

Napomena

Upute za montažu, ugradnju, tlačno opterećenje i dopuštene radne temperature pronaći ćete u tehničkim informacijama za vijčane spojeve cijevi.

Artikl

Naziv	Serija	Radni tlak bari	Vanjski Ø cijevi (mm)	G	i (mm)	L1 (mm)	L2 (mm)	S1	S3
VN 04 LL	LL	PN 100	4	1/8" -27 NPT	10,0	28,0	18,0	11	10
VN 05 LL	LL	PN 100	5	1/8" -27 NPT	10,0	28,0	16,5	11	12
VN 06 LL	LL	PN 100	6	1/8" -27 NPT	10,0	28,0	16,5	11	12
VN 08 LL	LL	PN 100	8	1/8" -27 NPT	10,0	30,0	18,5	12	14
VN NW 04 HL	L	PN 315	6	1/8" -27 NPT	10,0	32,0	17,0	12	14
VN NW 04 HL 1/4	L	PN 315	6	1/4" - 18 NPT	15,0	38,0	23,0	17	14
VN NW 04 HL 3/8	L	PN 315	6	3/8" - 18 NPT	15,0	39,0	24,0	19	14
VN NW 04 HL 1/2	L	PN 315	6	1/2" - 14 NPT	20,0	44,0	29,0	24	14
VN NW 06 HL 1/8	L	PN 315	8	1/8" -27 NPT	10,0	38,0	23,0	12	17
VN NW 06 HL	L	PN 315	8	1/4" - 18 NPT	15,0	38,0	23,0	17	17
VN NW 06 HL 3/8	L	PN 315	8	3/8" - 18 NPT	15,5	39,0	24,0	19	17
VN NW 06 HL 1/2	L	PN 315	8	1/2" - 14 NPT	20,0	44,0	29,0	24	17
VN NW 08 HL 1/8	L	PN 315	10	1/8" -27 NPT	15,5	39,5	25,0	17	19
VN NW 08 HL	L	PN 315	10	1/4" - 18 NPT	15,0	39,0	24,0	17	19
VN NW 08 HL 3/8	L	PN 315	10	3/8" - 18 NPT	15,2	40,0	25,0	19	19
VN NW 08 HL 1/2	L	PN 315	10	1/2" - 14 NPT	20,0	45,0	30,0	24	19
VN NW 10 HL 1/8	L	PN 315	12	1/8" -27 NPT	15,0	40,0	25,0	19	22
VN NW 10 HL 1/4	L	PN 315	12	1/4" - 18 NPT	15,0	40,0	25,0	19	22
VN NW 10 HL	L	PN 315	12	3/8" - 18 NPT	15,5	40,0	25,0	19	22
VN NW 10 HL 1/2	L	PN 315	12	1/2" - 14 NPT	20,0	45,0	30,0	24	22
VN NW 10 HL 3/4	L	PN 315	12	3/4" - 14 NPT	20,0	45,0	32,0	27	22
VN NW 13 HL 1/4	L	PN 315	15	1/4" - 18 NPT	15,0	40,0	25,0	24	22
VN NW 13 HL 3/8	L	PN 315	15	3/8" - 18 NPT	15,5	41,5	26,5	24	27
VN NW 13 HL	L	PN 315	15	1/2" - 14 NPT	20,0	46,0	31,0	24	27
VN NW 13 HL 3/4	L	PN 315	15	3/4" - 14 NPT	20,0	46,0	32,0	27	27
VN NW 16 HL 1/4	L	PN 315	18	1/4" - 18 NPT	15,0	32,0	25,0	27	32
VN NW 16 HL	L	PN 315	18	1/2" - 14 NPT	20,0	48,0	31,5	27	32
VN NW 16 HL 3/4	L	PN 315	18	3/4" - 14 NPT	20,0	48,5	32,0	27	32
VN NW 20 HL 1/2	L	PN 160	22	1/2" - 14 NPT	20,0	50,0	33,5	32	36
VN NW 20 HL	L	PN 160	22	3/4" - 14 NPT	20,0	50,0	33,5	32	36
VN NW 25 HL	L	PN 160	28	1" -11,5 NPT	25,0	56,0	39,5	41	41
VN NW 32 HL 1	L	PN 160	35	1" -11,5 NPT	25,0	62,0	40,5	46	50
VN NW 32 HL	L	PN 160	35	1,1/4" - 11,5 NPT	25,5	62,0	40,5	46	50
VN NW 40 HL	L	PN 160	42	1,1/2" - 11,5 NPT	26,0	65,0	42,0	55	60
VN NW 03 HS	S	PN 630	6	1/4" - 18 NPT	15,0	43,0	28,0	17	17
VN NW 03 HS 1/2	S	PN 630	6	1/2" - 14 NPT	20,0	50,0	35,0	24	17
VN NW 04 HS	S	PN 630	8	1/4" - 18 NPT	15,0	43,0	28,0	17	19
VN NW 04 HS 3/8	S	PN 630	8	3/8" - 18 NPT	15,5	43,0	28,0	19	19
VN NW 06 HS 1/4	S	PN 630	10	1/4" - 18 NPT	15,0	44,0	27,5	19	22
VN NW 06 HS	S	PN 630	10	3/8" - 18 NPT	15,5	44,0	27,5	19	22
VN NW 06 HS 1/2	S	PN 400	10	1/2" - 14 NPT	20,0	51,0	34,5	24	22

Usprkos pažljivoj provjeri ne mogu se isključiti pogreške i zbog toga ne preuzimamo odgovornost za sadržane podatke.

VN
Uvrtni vijčani spoj

HANSA-FLEX

Artikl

Naziv	Serija	Radni tlak bari	Vanjski Ø cijevi (mm)	G	i (mm)	L1 (mm)	L2 (mm)	S1	S3
VN NW 08 HS 1/4	S	PN 630	12	1/4" - 18 NPT	15,1	46,0	29,5	22	24
VN NW 08 HS	S	PN 630	12	3/8" - 18 NPT	15,5	46,0	29,5	22	24
VN NW 08 HS 1/2	S	PN 630	12	1/2" - 14 NPT	20,0	51,0	34,5	24	24
VN NW 10 HS 3/8	S	PN 630	14	3/8" - 18 NPT	15,5	54,0	36,0	24	27
VN NW 10 HS	S	PN 630	14	1/2" - 14 NPT	20,0	54,0	36,0	24	27
VN NW 13 HS	S	PN 400	16	1/2" - 14 NPT	20,0	54,0	35,5	27	30
VN NW 13 HS 3/4	S	PN 400	16	3/4" - 14 NPT	20,0	56,0	37,5	32	30
VN NW 16 HS 1/2	S	PN 400	20	1/2" - 14 NPT	20,0	59,0	37,5	32	30
VN NW 16 HS	S	PN 400	20	3/4" - 14 NPT	20,0	59,0	37,5	32	36
VN NW 16 HS 1	S	PN 400	20	1" -11,5 NPT	25,0	66,0	44,5	41	36
VN NW 20 HS 3/4	S	PN 400	25	3/4" - 14 NPT	20,0	64,0	40,0	41	46
VN NW 20 HS	S	PN 400	25	1" -11,5 NPT	25,0	69,0	45,0	41	46
VN NW 20 HS 1 1/4	S	PN 400	25	1,1/4" - 11,5 NPT	25,5	69,0	45,5	46	46
VN NW 25 HS 1	S	PN 400	30	1" -11,5 NPT	25,0	66,5	40,0	46	50
VN NW 25 HS	S	PN 400	30	1,1/4" - 11,5 NPT	25,5	73,0	46,5	46	50
VN NW 32 HS	S	PN 315	38	1,1/2" - 11,5 NPT	26,0	80,0	49,0	55	60

Serija: LL = veoma lagan L = lagan S = težak – PN = nazivni tlak PB = maks. radni tlak – Ø = vanjski promjer cijevi

Varijante proizvoda

VN MG	Uvrtni vijčani spoj, Mjed
VN VA	Uvrtni vijčani spoj, Oplemenjeni čelik
XVN	Uvrtni vijčani spoj, Čelik

Usprkos pažljivoj provjeri ne mogu se isključiti pogreške i zbog toga ne preuzimamo odgovornost za sadržane podatke.