VR
Uvrtni vijčani spoj

HANSA-FLEX

Karakteristike

Priključak 1	BSP vanjski navoj, cilindrični
Oblik brtve 1	Profil B
Priključak 2	metrički vanjski navoji, cilindrični
Oblik brtve 2	24° unutarnji konus
Izvedba	Uvrtni vijčani spoj
Oblik izrade	ravno
Norma	DIN 2353 ISO 8434-1
Opseg isporuke	Nastavak s preturnom maticom i nareznim prstenom
Materijal	Čelik
Površinska zaštita	galvanski premaz



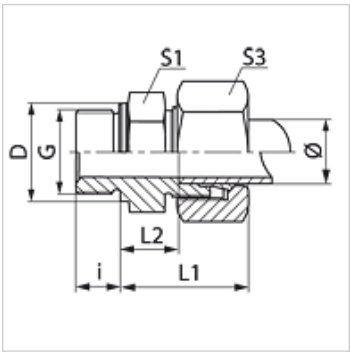

Napomena

Upute za montažu, ugradnju, tlačno opterećenje i dopuštene radne temperature pronaći ćete u tehničkim informacijama za vijčane spojeve cijevi.

Artikl

Naziv	Serija	Radni tlak bari	Vanjski Ø cijevi (mm)	G	D (mm)	i (mm)	L1 (mm)	L2 (mm)	S1	S3
VR NW 04 HL	L	PN 315	6	G 1/8" - 28	14	8	23,0	8,5	14	14
VR NW 04 HL 1/4	L	PN 315	6	G 1/4" - 19	18	12	24,5	10,0	19	14
VR NW 04 HL 3/8	L	PN 315	6	G 3/8" - 19	22	12	26,0	11,5	22	14
VR NW 04 HL 1/2	L	PN 315	6	G 1/2" -14	26	14	26,5	12,0	27	14
VR NW 06 HL 1/8	L	PN 315	8	G 1/8" - 28	14	8	24,0	9,0	14	17
VR NW 06 HL	L	PN 315	8	G 1/4" - 19	18	12	25,0	10,0	19	17
VR NW 06 HL 3/8	L	PN 315	8	G 3/8" - 19	22	12	26,5	11,5	22	17
VR NW 06 HL 1/2	L	PN 315	8	G 1/2" -14	26	14	27,0	12,0	27	17
VR NW 08 HL 1/8	L	PN 315	10	G 1/8" - 28	14	8	25,5	10,5	17	19
VR NW 08 HL	L	PN 315	10	G 1/4" - 19	18	12	26,0	11,0	19	19
VR NW 08 HL 3/8	L	PN 315	10	G 3/8" - 19	22	12	27,5	12,5	22	19
VR NW 08 HL 1/2	L	PN 315	10	G 1/2" -14	26	14	28,0	13,0	27	19
VR NW 10 HL 1/8	L	PN 315	12	G 1/8" - 28	14	8	27,0	12,0	17	22
VR NW 10 HL 1/4	L	PN 315	12	G 1/4" - 19	18	12	26,5	12,0	19	22
VR NW 10 HL	L	PN 315	12	G 3/8" - 19	22	12	27,0	12,5	22	22
VR NW 10 HL 1/2	L	PN 315	12	G 1/2" -14	26	14	27,5	13,0	27	22
VR NW 10 HL 3/4	L	PN 315	12	G 3/4" -14	32	16	28,5	14,0	32	22
VR NW 13 HL 1/4	L	PN 315	15	G 1/4" - 19	18	12	29,0	14,0	19	27
VR NW 13 HL 3/8	L	PN 315	15	G 3/8" - 19	22	12	29,0	14,0	24	27
VR NW 13 HL	L	PN 315	15	G 1/2" -14	26	14	29,0	14,0	27	27
VR NW 13 HL 3/4	L	PN 315	15	G 3/4" -14	32	16	30,0	15,0	32	27
VR NW 16 HL 3/8	L	PN 315	18	G 3/8" - 19	22	12	30,5	14,0	27	32
VR NW 16 HL	L	PN 315	18	G 1/2" -14	26	14	31,0	14,5	27	32
VR NW 16 HL 3/4	L	PN 315	18	G 3/4" -14	32	16	31,0	14,5	32	32
VR NW 16 HL 1	L	PN 315	18	G 1" -11	39	18	31,0	17,5	41	32
VR NW 20 HL 1/2	L	PN 160	22	G 1/2" -14	26	14	33,0	16,5	32	36
VR NW 20 HL	L	PN 160	22	G 3/4" -14	32	16	33,0	16,5	32	36
VR NW 20 HL 1	L	PN 160	22	G 1" -11	39	18	34,0	17,5	41	36
VR NW 25 HL 1/2	L	PN 160	28	G 1/2" -14	26	14	33,0	18,5	41	41
VR NW 25 HL 3/4	L	PN 160	28	G 3/4" -14	32	16	34,0	17,5	41	41
VR NW 25 HL	L	PN 160	28	G 1" -11	39	18	34,0	17,5	41	41
VR NW 25 HL 1 1/4	L	PN 160	28	G 1,1/4" - 11	49	20	39,0	17,5	50	41
VR NW 32 HL 3/4	L	PN 160	35	G 3/4" -14	32	16	39,0	17,5	41	50
VR NW 32 HL 1	L	PN 160	35	G 1" -11	39	18	40,0	18,5	50	50
VR NW 32 HL	L	PN 160	35	G 1,1/4" - 11	49	20	39,0	17,5	50	50
VR NW 32 HL 1 1/2	L	PN 160	35	G 1,1/2" - 11	55	22	40,0	19,0	55	50
VR NW 40 HL 1 1/4	L	PN 160	42	G 1,1/4" - 11	49	20	42,0	17,5	50	60
VR NW 40 HL	L	PN 160	42	G 1,1/2" - 11	55	22	42,0	19,0	55	60
VR NW 03 HS 1/8	S	PN 400	6	G 1/8" - 28	14	8	28,0	12,0	17	17
VR NW 03 HS	S	PN 400	6	G 1/4" - 19	18	12	28,0	13,0	19	17
VR NW 03 HS 3/8	S	PN 400	6	G 3/8" - 19	22	12	32,5	17,5	22	17
VR NW 03 HS 1/2	S	PN 400	6	G 1/2" -14	26	14	33,0	18,0	27	17

Usprkos pažljivoj provjeri ne mogu se isključiti pogreške i zbog toga ne preuzimamo odgovornost za sadržane podatke.

Artikl

Naziv	Serija	Radni tlak bari	Vanjski Ø cijevi (mm)	G	D (mm)	i (mm)	L1 (mm)	L2 (mm)	S1	S3
VR NW 04 HS	S	PN 400	8	G 1/4" - 19	18	12	30,0	15,0	19	19
VR NW 04 HS 3/8	S	PN 400	8	G 3/8" - 19	22	12	30,5	15,5	22	19
VR NW 04 HS 1/2	S	PN 400	8	G 1/2" -14	26	14	34,0	17,5	27	19
VR NW 06 HS 1/4	S	PN 400	10	G 1/4" - 19	18	12	30,5	14,5	22	22
VR NW 06 HS	S	PN 400	10	G 3/8" - 19	22	12	31,0	15,0	22	22
VR NW 06 HS 1/2	S	PN 400	10	G 1/2" -14	26	14	33,5	17,5	27	22
VR NW 08 HS 1/4	S	PN 400	12	G 1/4" - 19	18	12	32,5	16,5	22	24
VR NW 08 HS	S	PN 400	12	G 3/8" - 19	22	12	33,0	17,0	22	24
VR NW 08 HS 1/2	S	PN 400	12	G 1/2" -14	26	14	33,5	17,5	27	24
VR NW 08 HS 3/4	S	PN 400	12	G 3/4" -14	32	16	35,0	19,0	32	24
VR NW 10 HS 3/8	S	PN 400	14	G 3/8" - 19	22	12	36,5	18,5	24	27
VR NW 10 HS	S	PN 400	14	G 1/2" -14	26	14	37,0	19,0	27	27
VR NW 10 HS 3/4	S	PN 400	14	G 3/4" -14	32	16	36,5	18,5	32	27
VR NW 13 HS 1/4	S	PN 400	16	G 1/4" - 19	22	12	37,0	18,5	27	30
VR NW 13 HS 3/8	S	PN 400	16	G 3/8" - 19	22	12	37,0	18,5	27	30
VR NW 13 HS	S	PN 400	16	G 1/2" -14	26	14	37,0	18,5	27	30
VR NW 13 HS 3/4	S	PN 400	16	G 3/4" -14	32	16	39,0	20,5	32	30
VR NW 16 HS 1/2	S	PN 400	20	G 1/2" -14	26	14	44,0	22,5	32	36
VR NW 16 HS	S	PN 400	20	G 3/4" -14	39	18	44,0	22,5	32	36
VR NW 16 HS 1	S	PN 250	20	G 1" -11	39	18	42,0	17,5	41	36
VR NW 20 HS 1/2	S	PN 250	25	G 1/2" -14	26	14	47,0	26,5	41	46
VR NW 20 HS 3/4	S	PN 250	25	G 3/4" -14	32	16	47,0	23,0	41	46
VR NW 20 HS	S	PN 250	25	G 1" -11	39	18	47,0	23,0	41	46
VR NW 20 HS 1 1/4	S	PN 160	25	G 1,1/4" - 11	49	20	47,0	23,0	50	46
VR NW 25 HS 3/4	S	PN 160	30	G 3/4" -14	32	16	50,0	23,5	46	50
VR NW 25 HS 1	S	PN 160	30	G 1" -11	39	18	50,0	23,5	46	50
VR NW 25 HS 1 1/2	S	PN 160	30	G 1,1/2" - 11	55	22	50,0	23,5	55	50
VR NW 25 HS	S	PN 160	30	G 1,1/4" - 11	49	20	50,0	23,5	50	50
VR NW 32 HS 1	S	PN 160	38	G 1" -11	39	18	57,0	26,0	55	60
VR NW 32 HS 1 1/4	S	PN 160	38	G 1,1/4" - 11	49	20	57,0	26,0	55	60
VR NW 32 HS	S	PN 160	38	G 1,1/2" - 11	55	22	57,0	26,0	55	60

Serija: LL = veoma lagan L = lagan S = težak – PN = nazivni tlak PB = maks. radni tlak – Ø = vanjski promjer cijevi

Varijante proizvoda

VR MG	Uvrtni vijčani spoj, Mjed
VR VA	Uvrtni vijčani spoj, Oplemenjeni čelik
XVR	Uvrtni vijčani spoj, Čelik

Usprkos pažljivoj provjeri ne mogu se isključiti pogreške i zbog toga ne preuzimamo odgovornost za sadržane podatke.