VR ED VA
Uvrtni vijčani spoj

HANSA-FLEX

Karakteristike

Priključak 1	BSP vanjski navoj, cilindrični
Oblik brtve 1	Profil E
Priključak 2	metrički vanjski navoji, cilindrični
Oblik brtve 2	24° unutarnji konus
Izvedba	Uvrtni vijčani spoj
Oblik izrade	ravno
Norma	DIN 2353 ISO 8434-1
Opseg isporuke	Nastavak s preturnom maticom i nareznim prstenom
Materijal	Oplemenjeni čelik



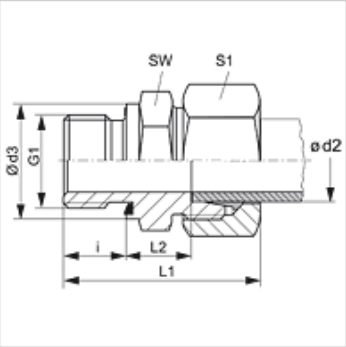

Napomena

Upute za montažu, ugradnju, tlačno opterećenje i dopuštene radne temperature pronaći ćete u tehničkim informacijama za vijčane spojeve cijevi.

Napomene uz narudžbu

Ulošci NBR ulošci brtve
FPM (Viton) na zahtjev

Artikl

Naziv	Serija	Radni tlak bari	Ø d2 (mm)	G1	Ø d3 (mm)	i (mm)	L1 (mm)	L2 (mm)	SW (mm)	S1
VR NW 04 HL ED VA	L	PN 315	6	G 1/8" - 28	14,0	8	31,0	8,5	14	14
VR NW 04 HL 1/4 ED VA	L	PN 315	6	G 1/4" - 19	18,7	12	39,0	10,0	19	14
VR NW 04 HL 3/8 ED VA	L	PN 315	6	G 3/8" - 19	22,0	12	39,0	11,5	22	14
VR NW 04 HL 1/2 ED VA	L	PN 315	6	G 1/2" -14	27,0	14	43,0	12,0	27	14
VR NW 06 HL 1/8 ED VA	L	PN 315	8	G 1/8" - 28	14,0	8	34,0	9,5	14	17
VR NW 06 HL ED VA	L	PN 315	8	G 1/4" - 19	18,7	12	37,0	10,0	19	17
VR NW 06 HL 3/8 ED VA	L	PN 315	8	G 3/8" - 19	22,0	12	40,5	11,5	22	17
VR NW 06 HL 1/2 ED VA	L	PN 315	8	G 1/2" -14	27,0	14	42,5	12,0	27	14
VR NW 08 HL 1/8 ED VA	L	PN 315	10	G 1/8" - 28	14,0	8	35,5	10,5	17	19
VR NW 08 HL ED VA	L	PN 315	10	G 1/4" - 19	18,7	12	38,0	11,0	19	19
VR NW 08 HL 3/8 ED VA	L	PN 315	10	G 3/8" - 19	22,0	12	42,5	12,5	22	19
VR NW 08 HL 1/2 ED VA	L	PN 315	10	G 1/2" -14	26,7	14	46,5	13,0	27	19
VR NW 08 HL 3/4 ED VA	L	PN 315	10	G 3/4" -14	32,0	16	44,0	14,0	32	19
VR NW 10 HL 1/8 ED VA	L	PN 315	12	G 1/8" - 28	14,0	8	37,0	11,0	19	22
VR NW 10 HL 1/4 ED VA	L	PN 315	12	G 1/4" - 19	18,7	12	42,0	12,5	22	22
VR NW 10 HL ED VA	L	PN 315	12	G 3/8" - 19	22,0	12	39,0	12,5	22	22
VR NW 10 HL 1/2 ED VA	L	PN 315	12	G 1/2" -14	26,7	14	45,0	13,0	27	22
VR NW 10 HL 3/4 ED VA	L	PN 160	12	G 3/4" -14	32,0	16	47,0	14,0	32	22
VR NW 13 HL 1/4 ED VA	L	PN 315	15	G 1/4" - 19	19,0	12	44,0	13,0	24	27
VR NW 13 HL 3/8 ED VA	L	PN 315	15	G 3/8" - 19	22,0	12	43,0	13,6	27	27
VR NW 13 HL ED VA	L	PN 315	15	G 1/2" -14	26,7	14	43,0	14,0	27	27
VR NW 13 HL 3/4 ED VA	L	PN 315	15	G 3/4" -14	32,0	16	48,5	15,0	32	27
VR NW 16 HL 3/8 ED VA	L	PN 315	18	G 3/8" - 19	22,0	12	45,0	14,0	27	32
VR NW 16 HL ED VA	L	PN 315	18	G 1/2" -14	26,7	14	45,0	14,5	27	32
VR NW 16 HL 3/4 ED VA	L	PN 315	18	G 3/4" -14	32,0	16	50,0	14,5	32	32
VR NW 16 HL 1 ED VA	L	PN 315	18	G 1" -11	40,0	18	52,0	16,5	41	32
VR NW 20 HL 3/8 ED VA	L	PN 160	22	G 3/8" - 19	22,0	12	61,0	16,0	32	36
VR NW 20 HL 1/2 ED VA	L	PN 315	22	G 1/2" -14	27,0	14	51,0	16,5	32	36
VR NW 20 HL ED VA	L	PN 160	22	G 3/4" -14	32,0	16	49,0	16,5	32	36
VR NW 20 HL 1 ED VA	L	PN 160	22	G 1" -11	40,0	18	56,0	17,5	41	36
VR NW 20 HL 1 1/4 ED VA	L	PN 160	22	G 1,1/4" - 11	50,0	20	54,0	17,5	50	36
VR NW 25 HL 1/2 ED VA	L	PN 160	28	G 1/2" -14	27,0	14	47,0	17,5	41	41
VR NW 25 HL 3/4 ED VA	L	PN 160	28	G 3/4" -14	32,0	16	54,0	17,5	41	41
VR NW 25 HL ED VA	L	PN 160	28	G 1" -11	39,7	18	52,0	17,5	41	41
VR NW 25 HL 1 1/4 ED VA	L	PN 160	28	G 1,1/4" - 11	50,0	20	55,0	18,5	50	41
VR NW 32 HL 1/2 ED VA	L	PN 160	35	G 1/2" -14	27,0	14	51,0	17,5	46	50
VR NW 32 HL 3/4 ED VA	L	PN 160	35	G 3/4" -14	27,0	16	54,0	18,5	46	50
VR NW 32 HL 1 ED VA	L	PN 160	35	G 1" -11	40,0	18	60,0	17,5	46	50
VR NW 32 HL ED VA	L	PN 160	35	G 1,1/4" - 11	49,7	20	59,0	17,5	50	50

Usprkos pažljivoj provjeri ne mogu se isključiti pogreške i zbog toga ne preuzimamo odgovornost za sadržane podatke.

VR ED VA
Uvrtni vijčani spoj

HANSA-FLEX

Artikl

Naziv	Serija	Radni tlak bari	Ø d2 (mm)	G1	Ø d3 (mm)	i (mm)	L1 (mm)	L2 (mm)	SW (mm)	S1
VR NW 32 HL 1 1/2 ED VA	L	PN 160	35	G 1,1/2" - 11	55,0	22	66,0	19,5	55	50
VR NW 40 HL 1 ED VA	L	PN 160	42	G 1" -11	40,0	18	65,0	19,0	55	60
VR NW 40 HL ED VA	L	PN 160	42	G 1,1/2" - 11	55,0	22	69,0	19,0	55	60
VR NW 40 HL 1 1/4 ED VA	L	PN 160	42	G 1,1/4" - 11	50,0	20	67,0	19,0	55	60
VR NW 03 HS 1/8 ED VA	S	PN 630	6	G 1/8" - 28	14,0	8	36,0	13,0	14	17
VR NW 03 HS ED VA	S	PN 630	6	G 1/4" - 19	18,7	12	40,0	13,0	19	17
VR NW 03 HS 3/8 ED VA	S	PN 630	6	G 3/8" - 19	22,0	12	42,0	15,5	22	17
VR NW 03 HS 1/2 ED VA	S	PN 630	6	G 1/2" -14	27,0	14	48,0	18,0	27	17
VR NW 03 HS 3/4 ED VA	S	PN 630	6	G 3/4" -14	31,9	16	45,0	15,0	32	17
VR NW 04 HS 1/8 ED VA	S	PN 630	8	G 1/8" - 28	14,0	8	38,0	14,0	17	19
VR NW 04 HS ED VA	S	PN 630	8	G 1/4" - 19	18,7	12	42,0	15,0	19	19
VR NW 04 HS 3/8 ED VA	S	PN 630	8	G 3/8" - 19	22,0	12	42,5	15,5	22	19
VR NW 04 HS 1/2 ED VA	S	PN 630	8	G 1/2" -14	27,0	14	47,0	15,0	27	19
VR NW 06 HS 1/8 ED VA	S	PN 630	10	G 1/8" - 28	14,0	8	38,5	13,5	19	22
VR NW 06 HS 1/4 ED VA	S	PN 630	10	G 1/4" - 19	18,7	12	42,5	14,5	22	22
VR NW 06 HS ED VA	S	PN 630	10	G 3/8" - 19	22,0	12	43,0	15,0	22	22
VR NW 06 HS 1/2 ED VA	S	PN 630	10	G 1/2" -14	26,7	14	47,0	17,5	27	22
VR NW 06 HS 3/4 ED VA	S	PN 630	10	G 3/4" -14	31,9	16	47,0	14,5	32	22
VR NW 08 HS 1/4 ED VA	S	PN 630	12	G 1/4" - 19	19,0	12	45,0	16,5	22	24
VR NW 08 HS ED VA	S	PN 630	12	G 3/8" - 19	22,0	12	45,0	17,0	22	24
VR NW 08 HS 1/2 ED VA	S	PN 630	12	G 1/2" -14	27,0	14	47,5	17,5	27	24
VR NW 08 HS 3/4 ED VA	S	PN 630	12	G 3/4" -14	32,0	16	52,0	17,5	32	24
VR NW 10 HS 1/4 ED VA	S	PN 630	14	G 1/4" - 19	19,0	12	46,0	16,0	24	27
VR NW 10 HS 3/8 ED VA	S	PN 630	14	G 3/8" - 19	22,0	12	48,0	18,5	24	27
VR NW 10 HS ED VA	S	PN 630	14	G 1/2" -14	26,7	14	51,0	19,0	27	27
VR NW 10 HS 3/4 ED VA	S	PN 630	14	G 3/4" -14	32,0	16	55,0	21,0	32	27
VR NW 10 HS 1 ED VA	S	PN 630	14	G 1" -11	40,0	18	59,0	23,0	41	24
VR NW 13 HS 1/4 ED VA	S	PN 400	16	G 1/4" - 19	19,0	12	50,0	17,5	27	30
VR NW 13 HS 3/8 ED VA	S	PN 400	16	G 3/8" - 19	22,0	12	47,0	18,0	27	30
VR NW 13 HS ED VA	S	PN 400	16	G 1/2" -14	26,7	14	51,0	18,5	27	30
VR NW 13 HS 3/4 ED VA	S	PN 400	16	G 3/4" -14	32,0	16	55,0	20,5	32	30
VR NW 13 HS 1 ED VA	S	PN 400	16	G 1" -11	40,0	18	59,0	22,5	41	30
VR NW 16 HS 3/8 ED VA	S	PN 400	20	G 3/8" - 19	22,0	12	-	18,0	32	36
VR NW 16 HS 1/2 ED VA	S	PN 400	20	G 1/2" -14	27,0	14	56,0	20,5	32	36
VR NW 16 HS ED VA	S	PN 400	20	G 3/4" -14	32,0	16	58,0	20,5	32	36
VR NW 16 HS 1 ED VA	S	PN 400	20	G 1" -11	39,7	18	62,0	20,5	41	36
VR NW 16 HS 11/4 ED VA	S	PN 400	20	G 1,1/4" - 11	50,0	20	64,0	22,5	50	36
VR NW 16 HS 11/2 ED VA	S	PN 400	20	G 1,1/2" - 11	55,0	22	69,0	25,5	55	36
VR NW 20 HS 1/2 ED VA	S	PN 400	25	G 1/2" -14	27,0	14	61,0	23,0	41	46
VR NW 20 HS 3/4 ED VA	S	PN 400	25	G 3/4" -14	32,0	16	63,0	23,0	41	46
VR NW 20 HS ED VA	S	PN 400	25	G 1" -11	39,7	18	65,0	23,0	41	46
VR NW 20 HS 1 1/4 ED VA	S	PN 400	25	G 1,1/4" - 11	50,0	18	65,0	23,0	50	46
VR NW 20 HS 11/2 ED VA	S	PN 400	25	G 1,1/2" - 11	55,0	22	72,0	26,0	55	46
VR NW 25 HS 3/4 ED VA	S	PN 400	30	G 3/4" -14	32,0	16	-	25,5	46	50
VR NW 25 HS 1 ED VA	S	PN 400	30	G 1" -11	40,0	18	68,0	23,5	46	50
VR NW 25 HS ED VA	S	PN 400	30	G 1,1/4" - 11	49,7	20	70,0	23,5	50	50
VR NW 25 HS 1 1/2 ED VA	S	PN 400	30	G 1,1/2" - 11	55,0	22	75,0	23,5	55	50
VR NW 32 HS 1 ED VA	S	PN 315	38	G 1" -11	40,0	18	60,0	26,0	46	50
VR NW 32 HS 1 1/4 ED VA	S	PN 315	38	G 1,1/4" - 11	50,0	20	74,0	26,0	55	60
VR NW 32 HS ED VA	S	PN 315	38	G 1,1/2" - 11	55,0	22	79,0	26,0	55	60

Serija: LL = veoma lagan L = lagan S = težak – PN = nazivni tlak PB = maks. radni tlak – Ø d2 = vanjski promjer cijevi

Varijante proizvoda

VR ED	Uvrtni vijčani spoj, Čelik
VR ED MG	Uvrtni vijčani spoj, Mjed
XVR ED VA	Uvrtni vijčani spoj, Oplemenjeni čelik

Rezervni dijelovi

WD V	Meka brtva JIC

Usprkos pažljivoj provjeri ne mogu se isključiti pogreške i zbog toga ne preuzimamo odgovornost za sadržane podatke.