W90 HROK L HJ

Uvrtni nastavak, dugi, kut 90°

Karakteristike

Priključak 1	BSP vanjski navoj, cilindrični
Oblik brtve 1	Navojni nastavak s O prstenom + komorni prsten
Priključak 2	UN/UNF vanjski navoji
Oblik brtve 2	74° vanjski konus
Izvedba	Uvrtni nastavci, dugi
Oblik izrade	Kutevi 90°
Materijal	Čelik
Površinska zaštita	galvanski premaz



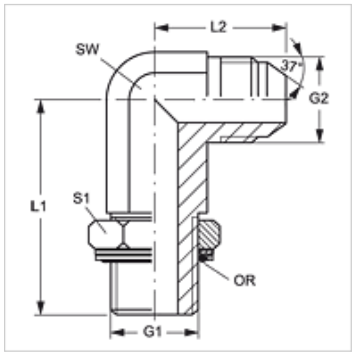

Artikl

Naziv	G1	G2	SW (mm)	L1 (mm)	L2 (mm)	S1	OR
W90 HROK L 04 HJ 06	G 1/4" - 19	9/16" - 18 UNF	14	56,5	27,0	19	10,78 x 2,62
W90 HROK L 04 HJ 08	G 1/4" - 19	3/4" - 16 UNF	19	64,0	31,5	19	10,78 x 2,62
W90 HROK L 06 HJ	G 3/8" - 19	9/16" - 18 UNF	19	67,0	28,5	22	13,94 x 2,62
W90 HROK L 06 HJ 08	G 3/8" - 19	3/4" - 16 UNF	19	67,0	31,5	22	13,94 x 2,62
W90 HROK L 06 HJ 10	G 3/8" - 19	7/8" - 14 UNF	22	75,0	36,5	22	13,94 x 2,62
W90 HROK L 08 HJ	G 1/2" -14	3/4" - 16 UNF	22	78,0	34,0	27	17,86 x 2,62
W90 HROK L 08 HJ 06	G 1/2" -14	9/16" - 18 UNF	22	78,0	31,0	27	17,86 x 2,62
W90 HROK L 08 HJ 10	G 1/2" -14	7/8" - 14 UNF	22	78,0	36,5	27	17,86 x 2,62
W90 HROK L 08 HJ 12	G 1/2" -14	1.1/16" -12 UN	27	88,0	42,0	27	17,86 x 2,62
W90 HROK L 12 HJ	G 3/4" -14	1.1/16" -12 UN	27	92,0	42,0	36	23,47 x 2,62
W90 HROK L 12 HJ 10	G 3/4" -14	7/8" - 14 UNF	27	92,0	39,5	36	23,47 x 2,62
W90 HROK L 12 HJ 16	G 3/4" -14	1,5/16" -12 UN	33	105,0	46,0	36	23,47 x 2,62
W90 HROK L 16 HJ	G 1" -11	1,5/16" -12 UN	33	105,0	44,5	41	29,74 x 3,53
W90 HROK L 16 HJ 12	G 1" -11	1.1/16" -12 UN	33	105,0	44,5	41	29,74 x 3,53
W90 HROK L 16 HJ 20	G 1" -11	1,5/8" -12 UN	41	124,0	52,0	41	29,74 x 3,53

SW, S1, S2 = širina ključa

Rezervni dijelovi

KAMMRING G	Komorni prsten, colni

Usprkos pažljivoj provjeri ne mogu se isključiti pogreške i zbog toga ne preuzimamo odgovornost za sadržane podatke.