WRK VA

Uvrtni vijčani spoj, kut 90°

HANSA-FLEX

Karakteristike

Priključak 1	BSP vanjski navoj, konusni
Oblik brtve 1	brtvljenje navoja
Priključak 2	metrički vanjski navoji, cilindrični
Oblik brtve 2	24° unutarnji konus
Izvedba	Uvrtni vijčani spoj
Oblik izrade	Kutevi 90°
Norma	DIN 2353 ISO 8434-1
Opseg isporuke	Nastavak s preturnom maticom i nareznim prstenom
Materijal	Oplemenjeni čelik



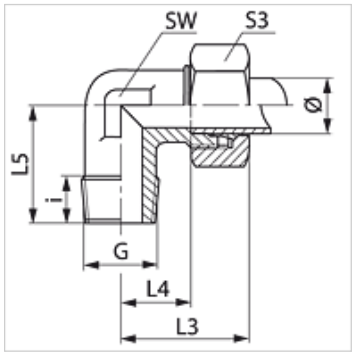

Napomena

Upute za montažu, ugradnju, tlačno opterećenje i dopuštene radne temperature pronaći ćete u tehničkim informacijama za vijčane spojeve cijevi.

Artikl

Naziv	Serija	Radni tlak bari	Vanjski Ø cijevi (mm)	G	i (mm)	L3 (mm)	L4 (mm)	L5 (mm)	SW (mm)	S3
WR 04 LL VA	LL	PN 100	4	R 1/8" K	8	21,0	11,0	18	11	10
WR 06 LL VA	LL	PN 100	6	R 1/8" K	8	22,0	10,0	17	11	12
WR 08 LL VA	LL	PN 100	8	R 1/8" K	8	23,0	11,5	20	12	14
WR NW 04 HL VA	L	PN 315	6	R 1/8" K	8	27,0	12,0	20	12	14
WR NW 04 HL 1/4 VA	L	PN 315	6	R 1/4" K	12	29,0	14,0	26	12	14
WR NW 04 HL 3/8 VA	L	PN 315	6	R 3/8" K	12	29,0	14,0	26	12	14
WR NW 04 HL 1/2 VA	L	PN 315	6	R 1/2" K	14	30,5	15,5	30	17	14
WR NW 06 HL 1/8 VA	L	PN 315	8	R 1/8" K	8	29,0	14,0	26	12	17
WR NW 06 HL VA	L	PN 315	8	R 1/4" K	12	29,0	14,0	26	12	17
WR NW 06 HL 3/8 VA	L	PN 315	8	R 3/8" K	12	34,0	19,0	28	17	17
WR NW 06 HL 1/2 VA	L	PN 315	8	R 1/2" K	13	34,0	19,0	30	17	17
WR NW 08 HL 1/8 VA	L	PN 315	10	R 1/8" K	8	30,0	15,0	26	14	19
WR NW 08 HL VA	L	PN 315	10	R 1/4" K	12	30,0	15,0	27	14	19
WR NW 08 HL 3/8 VA	L	PN 315	10	R 3/8" K	12	32,0	17,0	28	17	19
WR NW 08 HL 1/2 VA	L	PN 316	10	R 1/2" K	14	38,0	23,0	34	19	19
WR NW 10 HL 1/8 VA	L	PN 315	12	R 1/8" K	8	32,0	17,5	27	17	22
WR NW 10 HL 1/4 VA	L	PN 315	12	R 1/4" K	12	32,0	17,0	28	17	22
WR NW 10 HL VA	L	PN 315	12	R 3/8" K	12	32,0	17,0	28	17	22
WR NW 10 HL 1/2 VA	L	PN 315	12	R 1/2" K	14	38,0	23,0	34	19	22
WR NW 13 HL 1/4 VA	L	PN 315	15	R 1/4" K	12	36,0	21,0	30	19	27
WR NW 13 HL 3/8 VA	L	PN 315	15	R 3/8" K	12	36,0	21,0	34	19	27
WR NW 13 HL VA	L	PN 315	15	R 1/2" K	14	36,0	21,0	34	19	27
WR NW 13 HL 3/4 VA	L	PN 160	15	R 3/4" K	16	36,0	21,0	34	24	27
WR NW 16 HL 3/8 VA	L	PN 315	18	R 3/8" K	12	40,0	23,5	34	24	32
WR NW 16 HL VA	L	PN 315	18	R 1/2" K	14	40,0	23,5	36	24	32
WR NW 16 HL 3/4 VA	L	PN 160	18	R 3/4" K	16	36,0	27,5	44	27	32
WR NW 20 HL 1/2 VA	L	PN 160	22	R 1/2" K	14	44,0	27,5	41	27	36
WRK NW 20 HL VA	L	PN 160	22	R 3/4" K	16	44,0	27,5	31	27	36
WRK NW 25 HL VA	L	PN 160	28	R 1" K	20	51,5	30,5	47	36	41
WR NW 03 HS 1/8 VA	S	PN 400	6	R 1/8" K	8	29,5	15,0	25	8	12
WR NW 03 HS VA	S	PN 400	6	R 1/4" K	12	31,0	16,0	26	12	17
WR NW 03 HS 3/8 VA	S	PN 400	6	R 3/8" K	12	32,0	17,5	27	14	17
WR NW 03 HS 1/2 VA	S	PN 400	6	R 1/2" K	14	34,0	19,0	33	17	17
WR NW 04 HS VA	S	PN 400	8	R 1/4" K	12	32,0	17,0	27	17	19
WR NW 04 HS 3/8 VA	S	PN 400	8	R 3/8" K	12	33,0	18,0	28	14	19
WR NW 04 HS 1/2 VA	S	PN 400	8	R 1/2" K	14	38,0	23,0	33	17	19
WR NW 06 HS 1/4 VA	S	PN 400	10	R 1/4" K	12	34,0	17,5	28	17	22
WR NW 06 HS VA	S	PN 400	10	R 3/8" K	12	34,0	17,5	28	17	22
WR NW 06 HS 1/2 VA	S	PN 400	10	R 1/2" K	14	39,0	22,5	32	17	22
WR NW 08 HS 1/4 VA	S	PN 400	12	R 1/4" K	12	38,0	21,5	27	17	24
WR NW 08 HS VA	S	PN 400	12	R 3/8" K	12	38,0	21,5	28	17	24
WR NW 08 HS 1/2 VA	S	PN 400	12	R 1/2" K	14	40,0	23,5	34	19	24
WR NW 10 HS 3/8 VA	S	PN 400	14	R 3/8" K	12	40,0	22,0	30	19	27

Usprkos pažljivoj provjeri ne mogu se isključiti pogreške i zbog toga ne preuzimamo odgovornost za sadržane podatke.

WRK VA
Uvrtni vijčani spoj, kut 90°

Artikl

Naziv	Serija	Radni tlak bari	Vanjski Ø cijevi (mm)	G	i (mm)	L3 (mm)	L4 (mm)	L5 (mm)	SW (mm)	S3
WR NW 10 HS VA	S	PN 400	14	R 1/2" K	14	40,0	22,0	32	19	27
WR NW 13 HS 3/8 VA	S	PN 400	16	R 3/8" K	12	43,0	24,5	32	24	30
WR NW 13 HS VA	S	PN 400	16	R 1/2" K	14	43,0	24,5	32	24	30
WR NW 13 HS 3/4 VA	S	PN 160	16	R 3/4" K	16	43,0	24,5	41	24	30
WR NW 16 HS 1/2 VA	S	PN 400	20	R 1/2" K	14	48,0	26,5	42	27	36
WRK NW 16 HS VA	S	PN 160	20	R 3/4" K	16	48,0	26,5	42	27	36

Serija: LL = veoma lagan L = lagan S = težak – PN = nazivni tlak PB = maks. radni tlak – Ø = vanjski promjer cijevi

Varijante proizvoda

WRK	Uvrtni vijčani spoj, kut 90°, Čelik
WRK MG	Uvrtni vijčani spoj, kut 90°, Mjed
XWRK VA	Uvrtni vijčani spoj, kut 90°, Oplemenjeni čelik

Usprkos pažljivoj provjeri ne mogu se isključiti pogreške i zbog toga ne preuzimamo odgovornost za sadržane podatke.