GE O HB
Uvrtni nastavci

HANSA-FLEX

Karakteristike

Priključak 1	UN/UNF vanjski navoji
Oblik brtve 1	O prstenasta brtva na uvrtnom nastavku
Priključak 2	BSP vanjski navoj, cilindrični
Oblik brtve 2	60° unutarnji konus
Izvedba	Uvrtni nastavci
Oblik izrade	ravno
Materijal	Čelik
Površinska zaštita	galvanski premaz



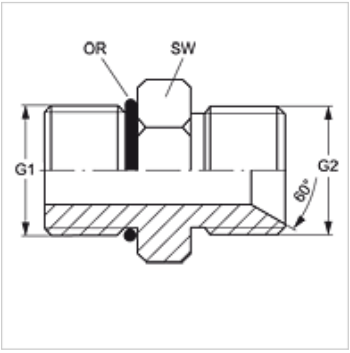

Artikl

Naziv	G1	G2	SW (mm)	OR
GE O 04 HB 02	7/16" -20 UNF	G 1/8" - 28	17	8,92 x 1,83
GE O 04 HB	7/16" -20 UNF	G 1/4" - 19	17	8,92 x 1,83
GE O 04 HB 06	7/16" -20 UNF	G 3/8" - 19	21	8,92 x 1,83
GE O 05 HB 02	1/2" -20 UNF	G 1/8" - 28	19	10,52 x 1,83
GE O 05 HB 04	1/2" -20 UNF	G 1/4" - 19	19	10,52 x 1,83
GE O 05 HB 06	1/2" -20 UNF	G 3/8" - 19	21	10,52 x 1,83
GE O 06 HB 04	9/16" - 18 UNF	G 1/4" - 19	21	11,90 x 1,98
GE O 06 HB	9/16" - 18 UNF	G 3/8" - 19	21	11,90 x 1,98
GE O 06 HB 08	9/16" - 18 UNF	G 1/2" -14	28	11,90 x 1,98
GE O 08 HB 04	3/4" - 16 UNF	G 1/4" - 19	26	16,36 x 2,20
GE O 08 HB 06	3/4" - 16 UNF	G 3/8" - 19	26	16,36 x 2,20
GE O 08 HB	3/4" - 16 UNF	G 1/2" -14	28	16,36 x 2,20
GE O 08 HB 10	3/4" - 16 UNF	G 5/8" -14	30	16,36 x 2,20
GE O 08 HB 12	3/4" - 16 UNF	G 3/4" -14	36	16,36 x 2,20
GE O 10 HB 06	7/8" -14 UNF	G 3/8" - 19	30	19,18 x 2,46
GE O 10 HB 08	7/8" -14 UNF	G 1/2" -14	30	19,18 x 2,46
GE O 10 HB	7/8" -14 UNF	G 5/8" -14	30	19,18 x 2,46
GE O 10 HB 12	7/8" -14 UNF	G 3/4" -14	36	19,18 x 2,46
GE O 10 HB 16	7/8" -14 UNF	G 1" -11	40	19,18 x 2,46
GE O 12 HB 08	1.1/16" -12 UN	G 1/2" -14	36	23,47 x 2,95
GE O 12 HB 10	1.1/16" -12 UN	G 5/8" -14	36	23,47 x 2,95
GE O 12 HB	1.1/16" -12 UN	G 3/4" -14	36	23,47 x 2,95
GE O 12 HB 16	1.1/16" -12 UN	G 1" -11	45	23,47 x 2,95
GE O 16 HB 12	1,5/16" -12 UN	G 3/4" -14	45	29,74 x 2,95
GE O 16 HB	1,5/16" -12 UN	G 1" -11	45	29,74 x 2,95
GE O 16 HB 20	1,5/16" -12 UN	G 1,1/4" - 11	55	29,74 x 2,95
GE O 20 HB 16	1,5/8" -12 UN	G 1" -11	55	37,47 x 3,00
GE O 20 HB	1,5/8" -12 UN	G 1,1/4" - 11	55	37,47 x 3,00
GE O 24 HB 20	1,7/8" -12 UN	G 1,1/4" - 11	62	43,69 x 3,00
GE O 24 HB	1,7/8" -12 UN	G 1,1/2" - 11	62	43,69 x 3,00

SW = širina ključa

Usprkos pažljivoj provjeri ne mogu se isključiti pogreške i zbog toga ne preuzimamo odgovornost za sadržane podatke.