# T HRO HJ

Uvrtni nastavak, T oblik

## Karakteristike

| | |
|---|---|
| **Priključak 1** | BSP vanjski navoj, cilindrični |
| **Oblik brtve 1** | G oblik |
| **Priključak 2 + 3** | UN/UNF vanjski navoji |
| **Oblik brtve 2 + 3** | 74° vanjski konus |
| **Izvedba** | Uvrtni nastavak, podesiv po smjeru |
| **Oblik izrade** | T oblik |
| **Materijal** | Čelik |
| **Površinska zaštita** | galvanski premaz |



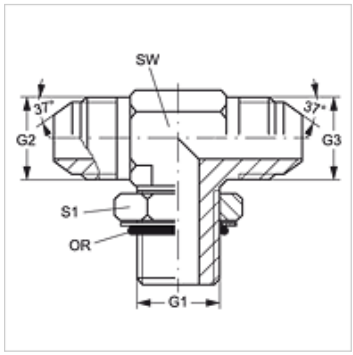


## Artikl

| Naziv | G1 | G2 + G3 | SW (mm) | S1 | OR |
|---|---|---|---|---|---|
| **T HRO 02 HJ 04** | G 1/8" - 28 | 7/16" -20 UNF | 11 | 14 | 8,00 x 2,00 |
| **T HRO 02 HJ 05** | G 1/8" - 28 | 1/2" -20 UNF | 14 | 14 | 8,00 x 2,00 |
| **T HRO 04 HJ** | G 1/4" - 19 | 7/16" -20 UNF | 11 | 19 | 10,77 x 2,62 |
| **T HRO 04 HJ 05** | G 1/4" - 19 | 1/2" -20 UNF | 14 | 19 | 10,77 x 2,62 |
| **T HRO 04 HJ 06** | G 1/4" - 19 | 9/16" - 18 UNF | 14 | 19 | 10,77 x 2,62 |
| **T HRO 04 HJ 08** | G 1/4" - 19 | 3/4" - 16 UNF | 19 | 19 | 10,77 x 2,62 |
| **T HRO 06 HJ 04** | G 3/8" - 19 | 7/16" -20 UNF | 19 | 22 | 13,94 x 2,62 |
| **T HRO 06 HJ 05** | G 3/8" - 19 | 1/2" -20 UNF | 19 | 22 | 13,94 x 2,62 |
| **T HRO 06 HJ** | G 3/8" - 19 | 9/16" - 18 UNF | 19 | 22 | 13,94 x 2,62 |
| **T HRO 06 HJ 08** | G 3/8" - 19 | 3/4" - 16 UNF | 19 | 22 | 13,94 x 2,62 |
| **T HRO 06 HJ 10** | G 3/8" - 19 | 7/8" - 14 UNF | 22 | 22 | 13,94 x 2,62 |
| **T HRO 08 HJ 04** | G 1/2" -14 | 7/16" -20 UNF | 22 | 27 | 17,86 x 2,62 |
| **T HRO 08 HJ 06** | G 1/2" -14 | 9/16" - 18 UNF | 22 | 27 | 17,86 x 2,62 |
| **T HRO 08 HJ** | G 1/2" -14 | 3/4" - 16 UNF | 22 | 27 | 17,86 x 2,62 |
| **T HRO 08 HJ 10** | G 1/2" -14 | 7/8" - 14 UNF | 22 | 27 | 17,86 x 2,62 |
| **T HRO 08 HJ 12** | G 1/2" -14 | 1.1/16" -12 UN | 27 | 27 | 17,86 x 2,62 |
| **T HRO 12 HJ 08** | G 3/4" -14 | 3/4" - 16 UNF | 27 | 36 | 23,47 x 2,62 |
| **T HRO 12 HJ 10** | G 3/4" -14 | 7/8" - 14 UNF | 27 | 36 | 23,47 x 2,62 |
| **T HRO 12 HJ** | G 3/4" -14 | 1.1/16" -12 UN | 27 | 36 | 23,47 x 2,62 |
| **T HRO 12 HJ 16** | G 3/4" -14 | 1,5/16" -12 UN | 33 | 36 | 23,47 x 2,62 |
| **T HRO 16 HJ 12** | G 1" -11 | 1.1/16" -12 UN | 33 | 41 | 29,74 x 3,53 |
| **T HRO 16 HJ** | G 1" -11 | 1,5/16" -12 UN | 33 | 41 | 29,74 x 3,53 |
| **T HRO 16 HJ 20** | G 1" -11 | 1,5/8" -12 UN | 41 | 41 | 29,74 x 3,53 |
| **T HRO 20 HJ 16** | G 1,1/4" - 11 | 1,5/16" -12 UN | 41 | 50 | 37,69 x 3,53 |
| **T HRO 20 HJ** | G 1,1/4" - 11 | 1,5/8" -12 UN | 41 | 50 | 37,69 x 3,53 |
| **T HRO 20 HJ 24** | G 1,1/4" - 11 | 1,7/8" -12 UN | 48 | 50 | 37,69 x 3,53 |
| **T HRO 24 HJ** | G 1,1/2" - 11 | 1,7/8" -12 UN | 48 | 60 | 44,04 x 3,53 |

SW, S1, S2 = širina ključa

*Usprkos pažljivoj provjeri ne mogu se isključiti pogreške i zbog toga ne preuzimamo odgovornost za sadržane podatke.*