HK CFL
Prirubnica CFL

HANSA-FLEX

Karakteristike

Materijal Čelik S355J0 (Fe510C)

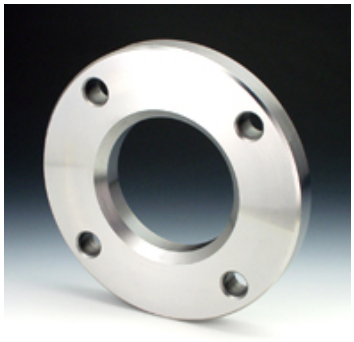

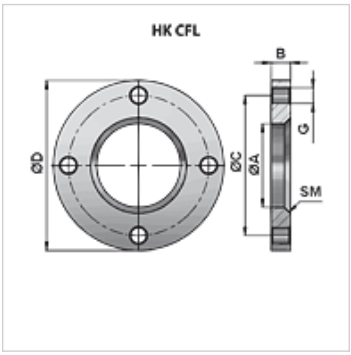

Napomena

Tolerancija za ØA: +0,2

Artikl

Naziv	Ø A (mm)	Ø C (mm)	Ø D (mm)	B (mm)	G	SM	Težina (kg)
HK CFL 0035 072	35,0	60	72,0	10,00	4 x Ø 7	3 x 45°	0,23
HK CFL 0040 080	40,0	65	80,0	12,00	4 x Ø 9	3 x 45°	0,33
HK CFL 0042 089	42,0	70	89,0	12,00	4 x Ø 9	3 x 45°	0,43
HK CFL 0045 095	45,0	75	95,0	12,00	4 x Ø 9	3 x 45°	0,50
HK CFL 0050 109	50,0	87	109,0	12,50	4 x Ø 11	4 x 45°	0,66
HK CFL 0055 123	55,0	100	123,0	14,50	4 x Ø 11	4 x 45°	1,00
HK CFL 0060 128	60,0	105	128,0	14,50	4 x Ø 13	4 x 45°	1,09
HK CFL 0065 135	65,0	110	135,0	15,50	4 x Ø 13	4 x 45°	1,30
HK CFL 0070 142	70,0	117	142,0	16,50	4 x Ø 13	5 x 45°	1,50
HK CFL 0073 145	73,0	120	145,0	16,50	4 x Ø 13	5 x 45°	1,50
HK CFL 0075 152	75,0	125	152,0	16,50	4 x Ø 13	5 x 45°	1,68
HK CFL 0080 162	80,0	127	162,0	16,50	4 x Ø 15	5 x 45°	1,94
HK CFL 0090 175	90,0	145	175,0	18,50	4 x Ø 15	5 x 45°	2,44
HK CFL 0095 181	95,0	149	181,0	18,50	6 x Ø 17	7 x 45°	2,53
HK CFL 0100 188	100,0	155	188,0	18,50	6 x Ø 17	7 x 45°	2,81
HK CFL 0105 188	105,0	156	188,0	24,50	6 x Ø 17	8 x 45°	3,44
HK CFL 0115 194	115,0	162	194,0	24,50	6 x Ø 17	8 x 45°	3,47
HK CFL 0125 228	123,0	190	228,0	28,00	6 x Ø 21	8 x 45°	5,95
HK CFL 0140 240	138,0	200	240,0	28,00	6 x Ø 21	8 x 45°	6,10
HK CFL 0145 250	143,0	210	250,0	28,00	6 x Ø 21	8 x 45°	6,65
HK CFL 0160 280	158,0	230	280,0	33,00	6 x Ø 23	10 x 45°	9,98
HK CFL 0170 300	168,0	250	300,0	38,00	6 x Ø 25	12 x 45°	13,30
HK CFL 0180 325	178,0	270	325,0	38,00	6 x Ø 28	12 x 45°	15,90

Usprkos pažljivoj provjeri ne mogu se isključiti pogreške i zbog toga ne preuzimamo odgovornost za sadržane podatke.