SWP
Strugač, SWP

Karakteristike

Izvedba	Strugač
Brzina klizanja max.	0,5 m/s
Temperatura min.	-30 °C
Temperatura max.	80 °C
Mediji	Mineralna ulja
Montaža	preša se u utvoreni utor
Izvedba	metrički
Materijal	(1) Čahura: čelik (2) Strugač: PUR
Primjena	Hidraulika

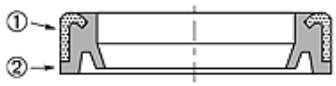

Toleranz / Tolerance		
d	D	L
h11	H8	+0,20 0

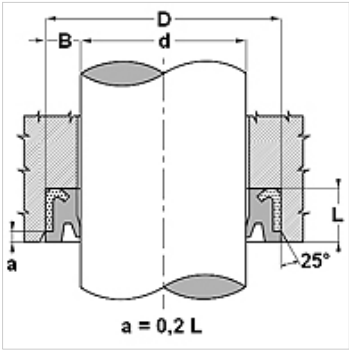

Opis

potrebno malo mjesta
velika otpornost na habanje
za uređaje za pomicanje zemlje i teške radne uvjete

Artikl

Naziv	d (mm)	D (mm)	L (mm)
SWP 25 38	25,0	38,0	7,5
SWP 30 40	30,0	40,0	4,0
SWP 30 43	30,0	43,0	7,5
SWP 35 45	35,0	45,0	4,0
SWP 35 50	35,0	50,0	7,5
SWP 36 48	36,0	48,0	6,0
SWP 38 50	38,0	50,0	7,5
SWP 40 50	40,0	50,0	4,0
SWP 40 52	40,0	52,0	6,0
SWP 45 55	45,0	55,0	4,0
SWP 45 60	45,0	60,0	7,5
SWP 50 60	50,0	60,0	4,0
SWP 50 65	50,0	65,0	7,5
SWP 55 65	55,0	65,0	3,2
SWP 55 68	55,0	68,0	4,0
SWP 55 70	55,0	70,0	7,5
SWP 56 70	56,0	70,0	7,5
SWP 60 70	60,0	70,0	7,0
SWP 60 75-1	60,0	75,0	4,0
SWP 60 75	60,0	75,0	7,5
SWP 63 78	63,0	78,0	7,5
SWP 65 80-1	65,0	80,0	5,0
SWP 65 80	65,0	80,0	7,5
SWP 70 80	70,0	80,0	5,0
SWP 70 84	70,0	84,0	7,5
SWP 70 85-1	70,0	85,0	4,0
SWP 70 85	70,0	85,0	7,5
SWP 71 86	71,0	86,0	5,0
SWP 75 90	75,0	90,0	7,5
SWP 75 95	75,0	95,0	10,0
SWP 76 96	76,5	96,5	10,0
SWP 80 94	80,0	94,0	8,0
SWP 80 95-1	80,0	95,0	5,0
SWP 80 95	80,0	95,0	7,5
SWP 80 100	80,0	100,0	10,0
SWP 85 100	85,0	100,0	10,0
SWP 85 105	85,0	105,0	10,0
SWP 90 104	90,0	104,0	8,0
SWP 90 105	90,0	105,0	6,0
SWP 90 110	90,0	110,0	10,0
SWP 95 115	95,0	115,0	10,0
SWP 100 115-2	100,0	115,0	4,0
SWP 100 115-1	100,0	115,0	6,5

Usprkos pažljivoj provjeri ne mogu se isključiti pogreške i zbog toga ne preuzimamo odgovornost za sadržane podatke.

Artikl

Naziv	d (mm)	D (mm)	L (mm)
SWP 100 115	100,0	115,0	7,5
SWP 100 120	100,0	120,0	10,0
SWP 105 120	105,0	120,0	7,5
SWP 110 125	110,0	125,0	9,0
SWP 110 130	110,0	130,0	10,0
SWP 115 130	115,0	130,0	7,5
SWP 120 140	120,0	140,0	10,0
SWP 130 145	130,0	145,0	7,5
SWP 160 175	160,0	175,0	10,0

Usprkos pažljivoj provjeri ne mogu se isključiti pogreške i zbog toga ne preuzimamo odgovornost za sadržane podatke.