GAR ABS
Strugač, GA-R

HANSA-FLEX

Karakteristike

Izvedba	Strugač
Brzina klizanja max.	0,5 m/s
Temperatura min.	-30 °C
Temperatura max.	100 °C
Mediji	Mineralna ulja Emulzije vode
Montaža	preša se u utvoreni utor
Materijal	(1) Čahura: čelik (2) Strugač: 90° Shore A NBR
Primjena	Hidraulika

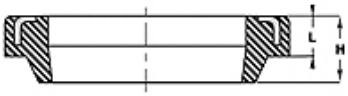

Toleranz / Tolerance		
d	D	L
h11	H8	+0,20 0

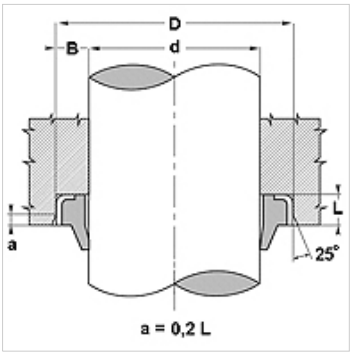

Opis

potrebno malo mjesta
Nema prodiranja prljavštine preko vanjskog metalnog prstena.
jednostavno rješenje.

Napomene uz narudžbu

Obratite nam se kod posebnim pogonskih uvjeta (tekućina, temperatura, tlak ...).
Moguć je i drugi materijal: FPM.

Artikl

Naziv	d (mm)	D (mm)	L (mm)	H (mm)
GA 12 18-3-R	12	18,0	3,5	5,0
GA 14 20-3-R	14	20,0	3,5	5,0
GA 15 21-3-R	15	21,0	3,5	5,0
GA 16 22-3-R	16	22,0	3,5	5,0
GA 18 28-5-R	18	28,0	5,0	7,0
GA 20 30-5-R	20	30,0	5,0	7,0
GA 22 32-5-R	22	32,0	5,0	7,0
GA 25 35-5-R	25	35,0	5,0	7,0
GA 28 38-5-R	28	38,0	5,0	7,0
GA 30 40-5-R	30	40,0	5,0	7,0
GA 30 40-7-R	30	40,0	7,0	10,0
GA 32 42-5-R	32	42,0	5,0	7,0
GA 36 46-5-R	36	46,0	5,0	7,0
GA 40 50-5-R	40	50,0	5,0	8,0
GA 42 52-5-R	42	52,0	5,0	7,0
GA 45 55-5-R	45	55,0	5,0	7,0
GA 50 60-5-R	50	60,0	5,0	7,0
GA 55 65-5-R	55	65,0	5,0	7,0
GA 56 66-5-R	56	66,0	5,0	7,0
GA 60 70-5-R	60	70,0	5,0	7,0
GA 63 73-5-R	63	73,0	5,0	7,0
GA 65 75-5-R	65	75,0	5,0	7,0
GA 70 80-5-R	70	80,0	5,0	7,0
GA 75 83-7-R	75	83,0	7,0	10,0
GA 80 88-7-R	80	88,0	7,0	10,0
GA 80 90-7-R	80	90,0	7,0	10,0

Usprkos pažljivoj provjeri ne mogu se isključiti pogreške i zbog toga ne preuzimamo odgovornost za sadržane podatke.