K-SCHL-AUFROLLER WASSER

Hose reels for water

Karakteristike

Materijal crijeva	Braided PVC
Radni tlak	Max. 9 bar
Radna temperatura	+5 °C to +60 °C
Zakretni kut	300°

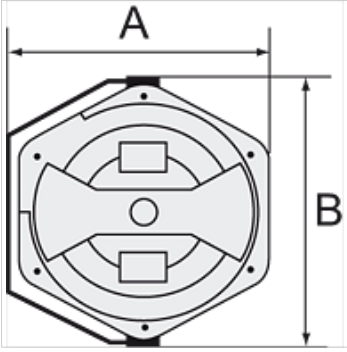

Napomena

Drugi podatci na zahtjev.

Opis

For easy mounting on the wall or ceiling. Closed, rugged, impact-resistant housing made of POM, supply/outlet R 1/4 male thread and lightweight, hard-wearing, braided PVC hose. Incl. 2 m feeder hose.

Artikl

Naziv	Dimenzije crijeva	A (mm)	B (mm)	Duljina crijeva (m)
K- 07 10 06 17	13 mm x 9,5 mm	394,5	436,0	14