K-PRAEZIONSFILTERREGLER
Precision filter regulators

HANSA FLEX

Karakteristike

Ulazni tlak	Max. 16 bar
Temperatura medija	max. 60 °C
Okolna temperatura	Max. 60 °C
Mediji	Micro-filtered, unoiled compressed air (0.01 µm)
Priključak za manometar	G 1/4
Veličina pora u filtarskom elementu	10 µm
Brtveni materijal	NBR
Kućište	Die-cast zinc
Vlastita potrošnja zraka	0.01 l/min, depending on input pressure and control range



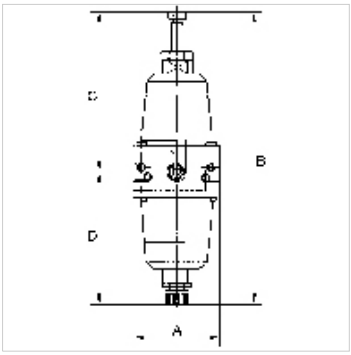

Napomena

The given flow rates are based on the following parameters: 750 l/min: P1: 8 bar, P2: 2 bar, Δp ≤ 0.2 bar
750 l/min: P1: 8 bar, P2: 3 bar, Δp ≤ 0.5 bar
750 l/min: P1: 8 bar, P2: 5 bar, Δp ≤ 0.7 bar
Drugi podatci na zahtjev.

Opis

Diaphragm pressure regulators containing no non-ferrous metals, with selfrelieving design, combined with a centrifugal separator for applications requiring an extremely accurate working pressure.

Dodatne informacije

1500 l/min: P1: 10 bar, P2: 7 bar, Δp ≤ 0.1 bar.

Artikl

Naziv	Navoj	Regulacijsko područje	Protok (L/min)	A (mm)	B	C (mm)	D (mm)
K- 07 25 09 86	G 1/4	0.1 - 2 bar	750	60,0	216,0 mm	120,0	96,0
K- 07 25 09 87	G 1/4	0.1 - 3 bar	750	60,0	216,0 mm	120,0	96,0
K- 07 25 09 88	G 1/4	0.2 - 5 bar	750	60,0	216,0 mm	120,0	96,0

Rezervni dijelovi

K-HALTERBAUSATZ STANDARD	Holder
K-VERSCHLEI-SATZ	Set of wearing parts

Usprkos pažljivoj provjeri ne mogu se isključiti pogreške i zbog toga ne preuzimamo odgovornost za sadržane podatke.