K-WV 3/2 ELK 24 VDC HANSA

3/2-way valves, electrically operated, with 24 VDC / 2.5 W solenoid

Karakteristike

Ulazni tlak	2 - 10 bar
Temperaturno područje	-10 °C to +50 °C
Mediji	komprimirani zrak
Snaga priviačenja izmjeničnog napona 50 Hz	2,2 VA
Trajanje uključenja	ED 100 %
Električni priključak	Connector type C, ISO 15217, 2 poles +PE
Pridržna snaga izmjeničnog napona 50 Hz	1,6 VA
Potrošnja energije DC	2,5 W
Vrsta zaštite	IP 65
Navoj priključka	Material: Die-cast zinc
Kućište	Material: Grivory® (PA 66)
Mjerenje vrijednosti protoka	At P2 = 6 bar, pressure drop Δp = 1 bar



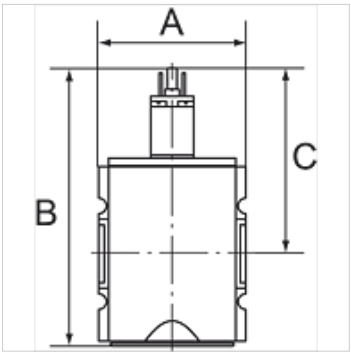

Napomena

Drugi podatci na zahtjev.

Opis

Pneumatic systems or parts of systems can be switched on and off by means of an electrical signal. When they are switched off, the system is exhausted at the same time.

Napomene uz narudžbu

Valves are also available with coil 110 V AC, 50 Hz and in a pneumatically operated version. Please ask for more information.

Artikl

Naziv	Navoj	Odvojak	Protok (L/min)	A (mm)	B	C (mm)
K- 07 25 11 05	G 1/4	1/4	2000	52,0	117,8 mm	84,8
K- 07 25 11 06	G 3/8	1/4	2000	52,0	117,8 mm	84,8
K- 07 25 11 31	G 3/8	1/2	4500	63,0	150,3 mm	93,8
K- 07 25 11 32	G 1/2	1/2	4500	63,0	150,3 mm	93,8
K- 07 25 11 37	G 3/4	1/2	12500	85,0	177,7 mm	110,7
K- 07 25 11 38	G 1	1/2	12500	85,0	177,7 mm	110,7

Pribor

K-SCHALLDAE SINTERBR S	Silencers, sintered bronze, slotted
K-SCHALLDAE SINTERBR GE MS1	Silencers, sintered bronze, with brass hexagon nut and brass thread

Rezervni dijelovi

K-HALTERBAUSATZ HANSA	Holder HANSA
K-VORSTEUERVENTIL HANSA	Replacement solenoid HANSA
K-GERAETESTECKER FORM C	Connector

Usprkos pažljivoj provjeri ne mogu se isključiti pogreške i zbog toga ne preuzimamo odgovornost za sadržane podatke.