K-DRG DRVS HANSA

Pressure regulators with continuous pressure supply

Karakteristike

Ulazni tlak	Max. 16 bar
Temperaturno područje	-10 °C to +50 °C
Mediji	komprimirani zrak
Navoj priključka	Material: Die-cast zinc
Kućište	Material: Grivory® (PA 66)
Membrana	NBR
Vlastita potrošnja zraka	only G3/4, G1 Max. 1.5 l/min (depending on secondary pressure)
Mjerenje vrijednosti protoka	At P1 = 10 bar, P2 = 6.3 bar and pressure drop Δp = 1 bar



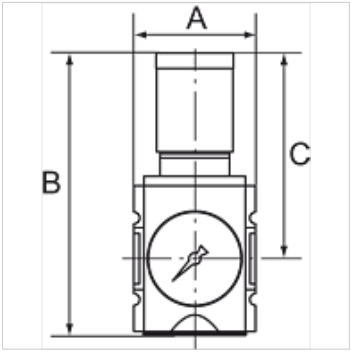

Napomena

Drugi podatci na zahtjev.

Opis

Diaphragm pressure regulators with self-relieving design and excellent flow ratesin modern design for mounting side by side. By assembling two or more controllers together, it is possible to supply several working air circuits with different output pressures via a single supply line. The regulator button can be latched and locked.

Napomene uz narudžbu

The price does not include a key lock. Please order separately.

Artikl

Naziv	Navoj	Regulacijsko područje	Protok (L/min)	A (mm)	B	C (mm)	Veličina
K- 07 25 02 51	G 1/4	0.1 - 1 bar	2200	52,0	128,5 mm	95,5	1
K- 07 25 02 52	G 1/4	0.1 - 2 bar	2200	52,0	128,5 mm	95,5	1
K- 07 25 02 53	G 1/4	0.2 - 4 bar	2200	52,0	128,5 mm	95,5	1
K- 07 25 02 54	G 1/4	0.5 - 8 bar	2200	52,0	128,5 mm	95,5	1
K- 07 25 02 55	G 1/4	0.5 - 10 bar	2200	52,0	128,5 mm	95,5	1
K- 07 25 02 56	G 1/4	0.5 - 16 bar	2200	52,0	128,5 mm	95,5	1
K- 07 25 02 69	G 3/8	0.1 - 1 bar	2600	52,0	128,5 mm	95,5	1
K- 07 25 02 70	G 3/8	0.1 - 2 bar	2600	52,0	128,5 mm	95,5	1
K- 07 25 02 71	G 3/8	0.2 - 4 bar	2600	52,0	128,5 mm	95,5	1
K- 07 25 02 72	G 3/8	0.5 - 8 bar	2600	52,0	128,5 mm	95,5	1
K- 07 25 02 73	G 3/8	0.5 - 10 bar	2600	52,0	128,5 mm	95,5	1
K- 07 25 02 74	G 3/8	0.5 - 16 bar	2600	52,0	128,5 mm	95,5	1
K- 07 25 02 57	G 3/8	0.1 - 1 bar	4300	63,0	149,5 mm	110,0	2
K- 07 25 02 58	G 3/8	0.1 - 2 bar	4300	63,0	149,5 mm	110,0	2
K- 07 25 02 59	G 3/8	0.2 - 4 bar	4300	63,0	149,5 mm	110,0	2
K- 07 25 02 60	G 3/8	0.5 - 8 bar	4300	63,0	149,5 mm	110,0	2
K- 07 25 02 61	G 3/8	0.5 - 10 bar	4300	63,0	149,5 mm	110,0	2
K- 07 25 02 62	G 3/8	0.5 - 16 bar	4300	63,0	149,5 mm	110,0	2
K- 07 25 02 63	G 1/2	0.1 - 1 bar	5000	63,0	149,5 mm	110,0	2
K- 07 25 02 64	G 1/2	0.1 - 2 bar	5000	63,0	149,5 mm	110,0	2
K- 07 25 02 65	G 1/2	0.2 - 4 bar	5000	63,0	149,5 mm	110,0	2
K- 07 25 02 66	G 1/2	0.5 - 8 bar	5000	63,0	149,5 mm	110,0	2
K- 07 25 02 67	G 1/2	0.5 - 10 bar	5000	63,0	149,5 mm	110,0	2
K- 07 25 02 68	G 1/2	0.5 - 16 bar	5000	63,0	149,5 mm	110,0	2

Pribor

K-STECKSCHLOSS	Key lock

Rezervni dijelovi

K-HALTERBAUSATZ HANSA	Holder HANSA
K-SCHALTTAFELMUTTER HANSA	Nut HANSA
K-DICHTSATZ HANSA	Set of seals HANSA

Usprkos pažljivoj provjeri ne mogu se isključiti pogreške i zbog toga ne preuzimamo odgovornost za sadržane podatke.