K-PRAEZI DRG DRUCKVER HANSA

Precision pressure regulators with continuous pressure supply

Karakteristike

Ulazni tlak	Max. 16 bar
Temperaturno područje	-10 °C to +50 °C
Mediji	komprimirani zrak
Navoj priključka	Material: Die-cast zinc
Kućište	Material: Grivory® (PA 66)
Membrana	NBR
Vlastita potrošnja zraka	2.6 l/min at P2 = 6 bar (depending on secondary pressure)
Mjerenje vrijednosti protoka	At P1 = 10 bar, P2 = 6.3 bar and pressure drop Δp = 1 bar



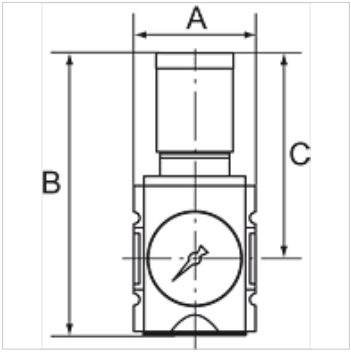

Napomena

Drugi podatci na zahtjev.

Opis

Precision diaphragm pressure regulators with self-relieving design and excellent flow rates in modern design for mounting side by side.
By assembling two or more controllers together, it is possible to supply several working air circuits with different pressures via a single supply line.

Napomene uz narudžbu

The price does not include a key lock. Please order separately.

Artikl

Naziv	Navoj	Regulacijsko područje	Protok (L/min)	A (mm)	B	C (mm)
K- 07 25 09 66	G 1/4	0.1 - 1 bar	2200	52,0	128,5 mm	95,5
K- 07 25 09 67	G 1/4	0.1 - 2 bar	2200	52,0	128,5 mm	95,5
K- 07 25 09 68	G 1/4	0.2 - 4 bar	2200	52,0	128,5 mm	95,5
K- 07 25 09 69	G 1/4	0.5 - 8 bar	2200	52,0	128,5 mm	95,5
K- 07 25 09 70	G 1/4	0.5 - 10 bar	2200	52,0	128,5 mm	95,5
K- 07 25 09 71	G 3/8	0.1 - 1 bar	2700	52,0	128,5 mm	95,5
K- 07 25 09 72	G 3/8	0.1 - 2 bar	2700	52,0	128,5 mm	95,5
K- 07 25 09 73	G 3/8	0.2 - 4 bar	2700	52,0	128,5 mm	95,5
K- 07 25 09 74	G 3/8	0.5 - 8 bar	2700	52,0	128,5 mm	95,5
K- 07 25 09 75	G 3/8	0.5 - 10 bar	2700	52,0	128,5 mm	95,5
K- 07 25 09 76	G 3/8	0.1 - 1 bar	4300	63,0	149,5 mm	110,0
K- 07 25 09 77	G 3/8	0.1 - 2 bar	4300	63,0	149,5 mm	110,0
K- 07 25 09 78	G 3/8	0.2 - 4 bar	4300	63,0	149,5 mm	110,0
K- 07 25 09 79	G 3/8	0.5 - 8 bar	4300	63,0	149,5 mm	110,0
K- 07 25 09 80	G 3/8	0.5 - 10 bar	4300	63,0	149,5 mm	110,0
K- 07 25 09 81	G 1/2	0.1 - 1 bar	5000	63,0	149,5 mm	110,0
K- 07 25 09 82	G 1/2	0.1 - 2 bar	5000	63,0	149,5 mm	110,0
K- 07 25 09 83	G 1/2	0.2 - 4 bar	5000	63,0	149,5 mm	110,0
K- 07 25 09 84	G 1/2	0.5 - 8 bar	5000	63,0	149,5 mm	110,0
K- 07 25 09 85	G 1/2	0.5 - 10 bar	5000	63,0	149,5 mm	110,0

Pribor

K-STECKSCHLOSS	Key lock

Rezervni dijelovi

K-HALTERBAUSATZ HANSA	Holder HANSA
K-SCHALTTAFELMUTTER HANSA	Nut HANSA
K-DICHTSATZ HANSA	Set of seals HANSA

Usprkos pažljivoj provjeri ne mogu se isključiti pogreške i zbog toga ne preuzimamo odgovornost za sadržane podatke.