# K-FI SPEZI METALLBEHAEL M STANDAD

Special filters with metal bowl and manual drain valve

## Karakteristike

| | |
|---|---|
| **Ulazni tlak** | Max. 16 bar (polycarbonate bowl / bowl guard), Max. 25 bar (metal bowl) |
| **Temperatura medija** | max. 50 °C |
| **Okolna temperatura** | Max. 50 °C |
| **Učinkovitost** | 99.999 % |
| **Veličina pora u filtarskom elementu** | 0.01 µm |
| **Kućište** | Die-cast zinc, painted silver |
| **Mjerenje vrijednosti protoka** | At P2 = 6 bar and pressure drop Δp = 1 bar |



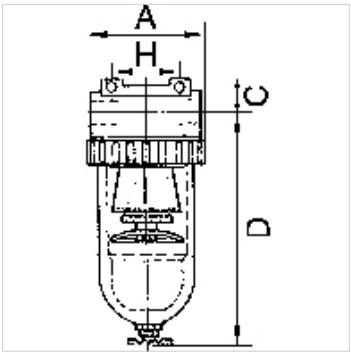


## Napomena

Drugi podatci na zahtjev.

## Opis

For all applications with particularly strict compressed air purity requirements. The separating efficiency of these filters permits very fine oil vapour particles and micro-fine suspended particles to be filtered. A standard filter should always be connected upstream to trap coarse impurities and protect the micro-filter inserts.

## Artikl

| Naziv | Navoj | Protok (L/min) | A (mm) | C (mm) | D (mm) | H (mm) | DN |
|---|---|---|---|---|---|---|---|
| **K- 07 25 10 74** | G 1/4 | 380 | 48,0 | 14,0 | 133,5 | 38,0 | 6 |
| **K- 07 25 10 77** | G 3/8 | 380 | 48,0 | 14,0 | 133,5 | 38,0 | 6 |
| **K- 07 25 10 79** | G 3/8 | 720 | 70,0 | 16,0 | 159,0 | 50,0 | 10 |
| **K- 07 25 10 81** | G 1/2 | 1250 | 79,0 | 18,0 | 171,0 | 50,0 | 15 |
| **K- 07 25 10 84** | G 3/4 | 7000 | 133,0 | 36,0 | 206,0 | 134,0 | 20 |
| **K- 07 25 10 87** | G 1 | 7000 | 133,0 | 36,0 | 206,0 | 120,0 | 25 |

## Rezervni dijelovi

| | |
|---|---|
| **K-HALTERBAUSATZ STANDARD** | Holder |
| **K-FILTERELEMENT STANDARD** | Filter element |
| **K-SCHUTZKORB G** | Protective cage |
| **K-XV AGM MS NI** | Double nipples, parallel male thread, nickel-plated brass |
| **K-LOESBARE DOPPELNIPPEL MS** | Double nipples |

*Usprkos pažljivoj provjeri ne mogu se isključiti pogreške i zbog toga ne preuzimamo odgovornost za sadržane podatke.*