K-DRG VARIOBLOC
Pressure regulators

HANSA-FLEX

Karakteristike

Ulazni tlak	Max. 25 bar
Temperatura medija	max. 50 °C
Okolna temperatura	Max. 50 °C
Brtveni materijal	NBR
Pokrov s oprugom	POM
Kućište	Die-cast zinc
Membrana	NBR
Mjerenje vrijednosti protoka	At P1 = 10 bar, P2 = 6 bar and pressure drop Δp = 1 bar



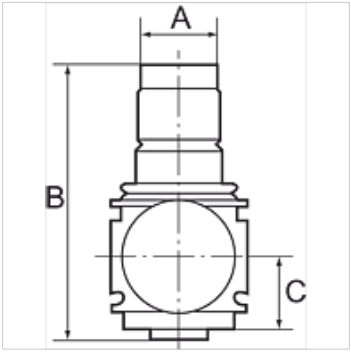

Napomena

Drugi podatci na zahtjev.

Opis

Reversible diaphragm pressure regulators, independent of inlet pressure, with self-relieving design. The pressure setting can be locked by pushing the knob down. Approved series in modern industrial design, with the following key benefits: Simple handling, Convenient modular assembly thanks to innovative fasteners, Excellent flow values.

Napomene uz narudžbu

Pressure regulators are also available in lockable version. Please ask for more information.

Artikl

Naziv	Navoj	Regulacijsko područje	Protok (L/min)	A (mm)	B	C (mm)
K- 07 25 04 18	G 1/4	0.5 - 6 bar	2000	48,0	98,0 mm	26,0
K- 07 25 04 19	G 1/4	0.5 - 10 bar	2000	48,0	98,0 mm	26,0
K- 07 25 04 20	G 1/4	0.5 - 16 bar	2000	48,0	98,0 mm	26,0
K- 07 25 04 21	G 3/8	0.5 - 6 bar	3200	48,0	98,0 mm	26,0
K- 07 25 04 22	G 3/8	0.5 - 10 bar	3200	48,0	98,0 mm	26,0
K- 07 25 04 23	G 3/8	0.5 - 16 bar	3200	48,0	98,0 mm	26,0
K- 07 25 04 24	G 1/2	0.5 - 6 bar	7000	70,0	134,0 mm	32,5
K- 07 25 04 25	G 1/2	0.5 - 10 bar	7000	70,0	134,0 mm	32,5
K- 07 25 04 26	G 1/2	0.5 - 16 bar	7000	70,0	134,0 mm	32,5
K- 07 25 04 27	G 3/4	0.5 - 6 bar	8000	70,0	134,0 mm	32,5
K- 07 25 04 28	G 3/4	0.5 - 10 bar	8000	70,0	134,0 mm	32,5
K- 07 25 04 29	G 3/4	0.5 - 16 bar	8000	70,0	134,0 mm	32,5
K- 07 25 04 30	G 1	0.5 - 6 bar	8000	124,0	134,0 mm	32,5
K- 07 25 04 31	G 1	0.5 - 10 bar	8000	124,0	134,0 mm	32,5
K- 07 25 04 32	G 1	0.5 - 16 bar	8000	124,0	134,0 mm	32,5

Rezervni dijelovi

K-VERSCHLEI-SATZ VARIOBLOC	Set of wearing parts

Usprkos pažljivoj provjeri ne mogu se isključiti pogreške i zbog toga ne preuzimamo odgovornost za sadržane podatke.