K-WTEH 2-TLG MET SICH TROPF VARIOBL

Service units, 2-piece with metal bowl, incl. sight glass and metal sight dome

Karakteristike

Ulazni tlak	Max. 16 bar (polycarbonate bowl), Max. 20 bar (metal bowl)
Temperatura medija	max. 50 °C
Okolna temperatura	Max. 50 °C (polycarbonate bowl), Max. 80 °C (metal bowl)
Veličina pora u filtarskom elementu	40 µm
Brtveni materijal	NBR
Pokrov s oprugom	POM
Kućište	Die-cast zinc
Membrana	NBR
Nastavak za kapanje	PA
Drain valve	Manual
Mjerenje vrijednosti protoka	At P1 = 10 bar, P2 = 6 bar and pressure drop Δp = 1 bar



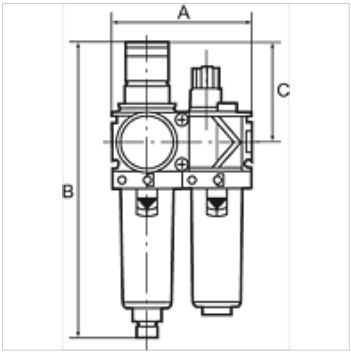

Napomena

Drugi podatci na zahtjev.

Opis

Two or three-piece service units consisting of a reversible diaphragm pressure regulator, independent of inlet pressure, with self-relieving design, combined with a centrifugal separator and a proportional lubricator. Approved series in modern industrial design, with the following key benefits: Simple handling, Convenient modular assembly thanks to innovative fasteners, Excellent flow values.

Napomene uz narudžbu

Service units are also available with bowl guard or metal bowl. Service units are also available in other control ranges (0.5 - 6 bar and 0.5 - 16 bar) and in lockable version. Please ask for more information.

Dodatne informacije

Service units are also available with bowl guard or metal bowl. Service units are also available in other control ranges.

Artikl

Naziv	Navoj	Regulacijsko područje	Protok (L/min)	A (mm)	B	C (mm)
K- 07 25 13 86	G 1/4	0.5 - 10 bar	1500	96,0	203,0 mm	68,0
K- 07 25 13 88	G 3/8	0.5 - 10 bar	1800	96,0	203,0 mm	68,0
K- 07 25 13 90	G 1/2	0.5 - 10 bar	3400	140,0	273,0 mm	98,0
K- 07 25 13 92	G 3/4	0.5 - 10 bar	5000	140,0	273,0 mm	98,0
K- 07 25 13 94	G 1	0.5 - 10 bar	5000	194,0	273,0 mm	98,0

Rezervni dijelovi

K-VERSCHLEI-SATZ VARIOBLOC	Set of wearing parts
K-FILTERELEMENT VARIOBLOC	Filter element
K-ERSATZBEHAELTER VARIOBLOC POLY	Spare tank Polycarbonat
K-TROPFAUFSATZ VARIOBLOC	Drip attachment
K-ABLASSVENTIL AUTO	Fully-automatic drain valve with Adapter G 1/8

Usprkos pažljivoj provjeri ne mogu se isključiti pogreške i zbog toga ne preuzimamo odgovornost za sadržane podatke.