K-HS RD

Unidirectional banjo valves, pneumatic release, port 2 with female thread

Karakteristike

Radni tlak	0.3 - 10 bar
Upravljački tlak	0.5 - 2.5 bar, depending on operating pressure
Temperatura medija	max. 60 °C
Ugradbeni položaj	Any. The ring piece must be positioned before the valve is tightened
Materijal	poniklani mjed
Brtveni materijal	Perbunan



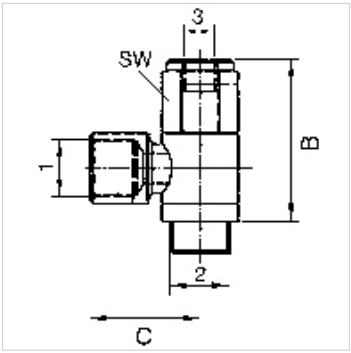

Napomena

Drugi podatci na zahtjev.

Opis

For stopping and positioning the cylinder movement: If a control signal is present at port 3 (see drawing), air can flow to and from the cylinder. If no control signal is present, the cylinder exhaust air is shut off by the unidirectional valve.
The cylinder is stopped. Releasable unidirectional valves are screwed directly onto the cylinder instead of the normal pipe connections.

Artikl

Naziv	Port 1	Port 2	Priključak 3	B (mm)	C (mm)
K- 07 15 07 04	G 1/8	G 1/8	M 5	38,0	21,5
K- 07 15 07 03	G 1/4	G 1/4	G 1/8	43,0	25,4
K- 07 15 07 05	G 3/8	G 3/8	G 1/8	46,0	31,6
K- 07 15 07 02	G 1/2	G 1/2	G 1/8	52,0	32,0

Usprkos pažljivoj provjeri ne mogu se isključiti pogreške i zbog toga ne preuzimamo odgovornost za sadržane podatke.