K-SCHALLDAE SINTERBR FL MS

Silencers, sintered bronze, flat design with brass hexagon nut and brass thread

Karakteristike

Radni tlak	maks. 10 bar
Radna temperatura	-10 °C to +200 °C
Razina buke 6 bar	80 ~ 90 dB(A)

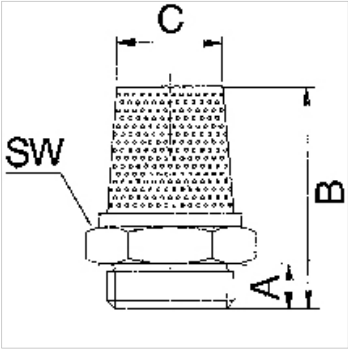

Opis

For reducing the exhaust noise generated by pneumatic equipment.

Artikl

Naziv	Navoj	A (mm)	B (mm)	C (mm)	SW (veličina ključa)
K- 07 40 35 16	M 5	4,0	7,6	6,0	8 mm
K- 07 40 35 17	G 1/8	5,5	10,5	11,0	13 mm
K- 07 40 35 18	G 1/4	7,0	13,5	13,0	17 mm
K- 07 40 35 19	G 3/8	7,5	16,0	17,0	22 mm
K- 07 40 35 20	G 1/2	9,5	18,0	20,0	24 mm

Usprkos pažljivoj provjeri ne mogu se isključiti pogreške i zbog toga ne preuzimamo odgovornost za sadržane podatke.