K-WTST SAFETY BK SCHA AN DR HANSA

SAFETY service unit sets, comprising a ball valve with silencer, start-up valve and pressure regulator

Karakteristike

Ulazni tlak	2.5 - 16 bar
Izlazni tlak	0.5 - 8 bar
Temperaturno područje	-10 °C to +50 °C
Mediji	komprimirani zrak
Brtveni materijal	NBR
Navoj priključka	Material: Die-cast zinc
Spremnik	Polycarbonate (with bayonet lock) and bowl guard
Filtarski element	Cellpor (PE) 5 µm
Kućište	Material: Grivory® (PA 66)
Membrana	NBR
Vlastita potrošnja zraka	Max. 1.5 l/min (depending on secondary pressure)
Mjerenje vrijednosti protoka	At P1 = 10 bar, P2 = 6.3 bar and pressure drop Δp = 1 bar
Priključak za odzračivanje Kuglasti ventil	Silencer

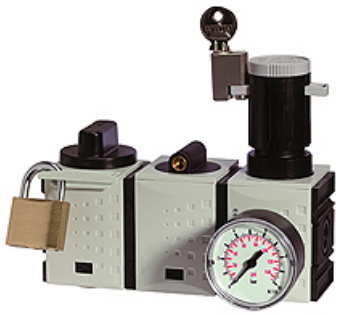

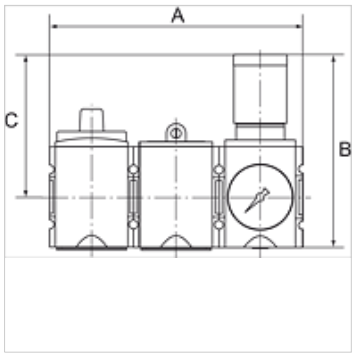

Napomena

Drugi podatci na zahtjev.

Opis

These compressed air service unit sets, comprising a ball valve with silencer, a start-up valve and one out of a pressure regulator, filter regulator or service unit, meet even the strictest requirements for operating reliability and accident prevention!

Napomene uz narudžbu

The price does not include a key lock and padlock. Please order separately. For accessories and spare parts, refer to individual components: ball valve, start-up valve, pressure regulator, filter regulator, 2-piece service unit

Artikl

Naziv	Navoj	Regulacijsko područje	Protok (L/min)	A (mm)	B	C (mm)
K- 07 25 15 20	G 1/4	2.5 - 8 bar	2000	156,0	128,5 mm	95,5
K- 07 25 15 21	G 3/8	2.5 - 8 bar	2000	156,0	128,5 mm	95,5
K- 07 25 15 22	G 3/8	2.5 - 8 bar	4300	189,0	149,5 mm	110,0
K- 07 25 15 23	G 1/2	2.5 - 8 bar	4300	189,0	149,5 mm	110,0
K- 07 25 15 24	G 3/4	2.5 - 8 bar	10000	255,0	191,0 mm	137,0
K- 07 25 15 25	G 1	2.5 - 8 bar	10000	255,0	191,0 mm	137,0

Pribor

K-STECKSCHLOSS	Key lock
K-VORHAENGESCHLOSS	Padlock

Usprkos pažljivoj provjeri ne mogu se isključiti pogreške i zbog toga ne preuzimamo odgovornost za sadržane podatke.