K-WTEH 3-TLG PC-BEHAEL S W H G-MINI

Service units, 3-piece with polycarbonate bowl, bowl guard and joiner for wall mounting, semi-automatic drain valve

Karakteristike

Ulazni tlak	Max. 10 bar
Temperatura medija	max. 70 °C
Okolna temperatura	Max. 70 °C
Veličina pora u filtarskom elementu	5 µm
Brtveni materijal	NBR
Pokrov s oprugom	POM
Kućište	Die-cast aluminium
Nastavak za kapanje	Brass/POM
Drain valve	Semi-automatic
Mjerenje vrijednosti protoka	At P1 = 8 bar, P2 = 6 bar and pressure drop Δp = 1 bar
Drugi podatci	User manual on request



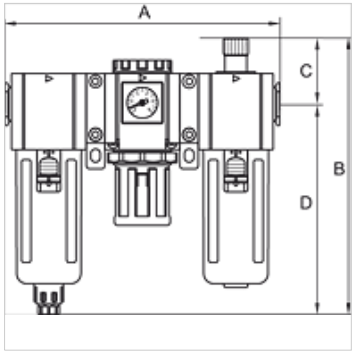

Artikl

Naziv	Navoj	Regulacijsko područje	Protok (L/min)	A (mm)	B	C (mm)	D (mm)	Veličina
K- 07 25 14 35	G 1/8	1.5 - 9 bar	500	138,0	132,0 mm	39,0	93,0	200
K- 07 25 14 36	G 1/4	1.5 - 9 bar	500	138,0	132,0 mm	39,0	93,0	200

Pribor

K-VERSCHLEI-SATZ	Set of wearing parts
K-ERSATZMEMBRANE	Replacement diaphragm
K-ADAPTERPLATTEN HANSA	Adapter plate HANSA
K-FILTERELEMENT	Filter element
K-ERSATZBEHAELTER G UND G-MINI POLY	Spare tanks »G« Series and »G-mini« Series Polycarbonat
K-VERBINDUNGELEMENTE	Connecting sets
K-WANDHALTER	Wall bracket

Usprkos pažljivoj provjeri ne mogu se isključiti pogreške i zbog toga ne preuzimamo odgovornost za sadržane podatke.