K-ZFL ABSP-KLAPPEN DOPPEL

Butterfly valves, with double-acting actuator, min. pilot pressure 5 bar

HANSA FLEX

Karakteristike

Izvedba	Pneumatic actuators, in double- or single acting version
Radni tlak	Max. 16 bar
Radna temperatura	-15 °C to +120 °C
Mediji	Water / steam, salt water, salt water, ester, ketone, alkali, caustic soda, sodium hydroxide. Not recommended for hydrocarbons
Upravljački tlak	5.5 bar
Ventilski adapter	Supplied as standard, operated by a 3/2- or 5/2-way valve
Zakretni kut	90 °
Pogon	aluminium eloxed
Brtva pogona	NBR
Kućište	Grey cast iron GG25 epoxy resin coated, RAL 5015
Brtva	EPDM
Vratilo	SS416
Valovita brtva	EPDM
Aktiviranje	



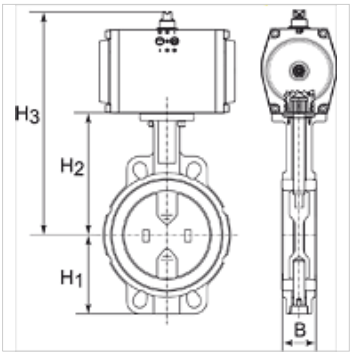

Napomena

Drugi podatci na zahtjev.

Artikl

Naziv	Pločica	DN	B (mm)	H1 (mm)	H2 (mm)	H3 (mm)	L (mm)
K- 07 30 03 28	Stainless Steel CF8M/1.4404	40	38,0	68,0	108,0	212,0	94,0
K- 07 30 03 29	Stainless Steel CF8M/1.4404	50	47,0	71,0	143,0	247,0	100,0
K- 07 30 03 30	Stainless Steel CF8M/1.4404	65	49,0	78,0	155,0	259,0	115,0
K- 07 30 03 31	Stainless Steel CF8M/1.4404	80	47,0	89,0	162,0	280,0	127,0
K- 07 30 03 32	Stainless Steel CF8M/1.4404	100	56,0	102,0	178,0	308,0	163,0
K- 07 30 03 33	Stainless Steel CF8M/1.4404	125	59,0	123,0	191,0	321,0	190,0
K- 07 30 03 35	Stainless Steel CF8M/1.4404	150	59,0	138,0	205,0	352,0	216,0

Usprkos pažljivoj provjeri ne mogu se isključiti pogreške i zbog toga ne preuzimamo odgovornost za sadržane podatke.