K-NEBELOELER PC-BEHAELTER HW G

Oil-mist lubricators with polycarbonate bowl, bowl guard and »HW« mounting bracket

HANSA-FLEX

Karakteristike

Ulazni tlak	Max. 10 bar
Temperatura medija	max. 70 °C
Okolna temperatura	Max. 70 °C
Radni tlak	0.5 - 9 bar
Brtveni materijal	NBR
Pokrov s oprugom	POM
Kućište	Die-cast aluminium
Nastavak za kapanje	Brass/POM
Mjerenje vrijednosti protoka	At P1 = 8 bar, P2 = 6 bar and pressure drop Δp = 1 bar
Drugi podatci	User manual on request



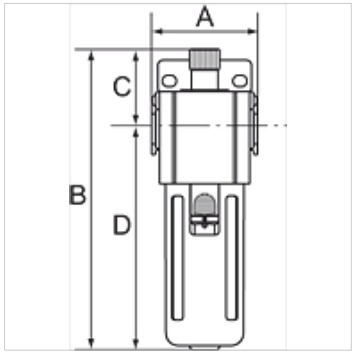

Artikl

Naziv	Navoj	Protok (L/min)	A (mm)	B	C (mm)	D (mm)	Veličina
K- 07 25 08 68	G 1/4	2200	51,0	169,0 mm	44,0	125,0	300
K- 07 25 08 69	G 3/8	2650	51,0	169,0 mm	44,0	125,0	300
K- 07 25 08 70	G 1/2	2650	51,0	169,0 mm	44,0	125,0	300
K- 07 25 08 71	G 3/8	7500	68,0	190,0 mm	48,0	142,0	400
K- 07 25 08 72	G 1/2	7500	68,0	190,0 mm	48,0	142,0	400

Pribor

K-ERSATZBEHAELTER G UND G-MINI POLY	Spare tanks »G« Series and »G-mini« Series Polycarbonat
K-HALTERBAUSATZ	Holder
K-VERBINDUNGELEMENTE	Connecting sets
K-WANDHALTER	Wall bracket

Usprkos pažljivoj provjeri ne mogu se isključiti pogreške i zbog toga ne preuzimamo odgovornost za sadržane podatke.