K-BKR ELK 230 VAC MS

Brass ball valves with electric actuator 230 VAC, 50 Hz

HANSA-FLEX

Karakteristike

Radni tlak	DN 15 - DN 32: max. 40 bar; DN 40 - DN 50: max. 25 bar
Radna temperatura	-20 °C to +70 °C
Trajanje uključenja	ED 30 %
Vlaga zraka	30 % to 95 %
Uklopni položaji	Manually operated
Razred zaštite	IP 67
Izvršno vrijeme	13 sec. = 230 VAC, 50 Hz 15 sec. = 24 VDC
Okolna temperatura	-30 °C to +70 °C
Montažna prirubnica	ISO 5211
Kućište	Aluminium, powder-coated
Kuglasti ventil	brass nickel plated
Kugla, uklopna osovina	Chrome-plated brass
Brtva kugle	PTFE, glass fibre-reinforced
Brtva uklopne osovine	FKM



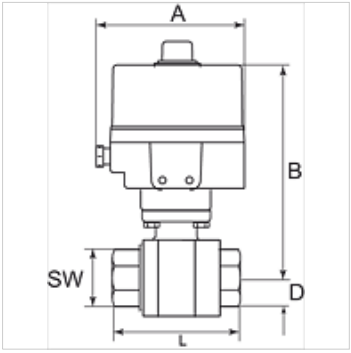

Napomena

Drugi podatci na zahtjev.

Opis

Voltage range 230 VAC, 50 Hz or 24 VDC. 2-way cock, full bore, for neutral gases and liquids.
Reversible electric rotary actuator.

Artikl

Naziv	DN	Navoj	A (mm)	B (mm)	D (mm)	L (mm)	SW (mm)
K- 07 30 20 64	15	Rp 1/2	152,0	189,0	17,0	75,0	26
K- 07 30 20 65	20	Rp 3/4	152,0	192,0	20,0	80,0	32
K- 07 30 20 66	25	Rp 1	152,0	195,0	25,0	90,0	41
K- 07 30 20 67	32	Rp 1 1/4	152,0	206,0	30,0	110,0	50
K- 07 30 20 68	40	Rp 1 1/2	152,0	213,0	36,0	120,0	55
K- 07 30 20 69	50	Rp 2	152,0	224,0	45,0	140,0	70

Usprkos pažljivoj provjeri ne mogu se isključiti pogreške i zbog toga ne preuzimamo odgovornost za sadržane podatke.