K-FI AK KOH PC-BEHAEL VARIOBLOC

Activated carbon filters with polycarbonate bowl

Karakteristike

Ulazni tlak	Max. 16 bar (polycarbonate bowl), Max. 20 bar (metal bowl)
Temperatura medija	max. 50 °C
Okolna temperatura	Max. 50 °C (polycarbonate bowl), Max. 80 °C (metal bowl)
Kvaliteta zraka ISO 85731	Class 1 dirt, class 1 oil
Sadržaj preostalog ulja	0,003 mg/m3
Mjerenje vrijednosti protoka	At P1 = 7 bar and pressure drop Δp = 0,1 bar



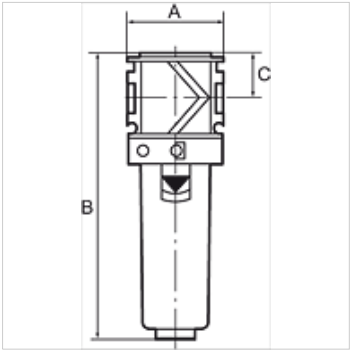

Napomena

Activated carbon filters are also supplied with protective cage or metal container.
Drugi podatci na zahtjev.

Opis

The activated carbon filter absorbs oil vapour from the compressed air. The entering compressed air needs to be dry and free of contaminants (an upstream microfilter is strongly recommended).

Artikl

Naziv	Navoj	Protok (L/min)	A (mm)	B	C (mm)
K- 07 25 19 59	G 1/4	800	48,0	142,0 mm	22,0
K- 07 25 19 60	G 3/8	1000	48,0	142,0 mm	22,0
K- 07 25 19 61	G 1/2	1200	70,0	193,0 mm	26,0
K- 07 25 19 62	G 3/4	1300	70,0	193,0 mm	26,0
K- 07 25 19 63	G 1	1300	124,0	193,0 mm	26,0

Usprkos pažljivoj provjeri ne mogu se isključiti pogreške i zbog toga ne preuzimamo odgovornost za sadržane podatke.