K-HAND-SCHIEBEVENTIL

Manual slide valves

Caratteristiche

Pressione d'esercizio	max. 10 bar
Temperatura d'esercizio	max. +70 °C

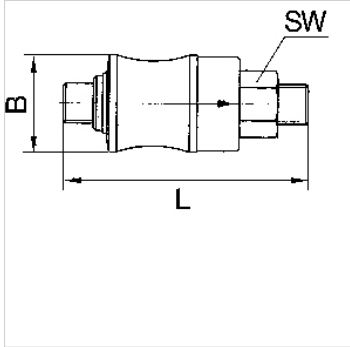

Nota

Altri dati su richiesta.

Descrizione

For use on devices that have to be vented whenever they are turned off, either because of safety regulations or for technical reasons. The pneumatic devices are disconnected from the system and simultaneously vented each time they are shut off.

Articolo

Denominazione	Filetto	B (mm)	L (mm)	SW (mm)
K- 07 30 15 92	G 1/8	21,0	67,0	14
K- 07 30 15 93	G 1/4	24,0	77,0	17
K- 07 30 15 94	G 3/8	31,0	87,0	22
K- 07 30 15 95	G 1/2	35,0	104,0	26

Nonostante il più attento esame non si possono escludere eventuali errori ed omissioni, non ci assumiamo alcuna responsabilità per le indicazioni contenute.