K-3 BKR L VA

3-way ball valves, L-bore

Caratteristiche

Pressione d'esercizio	max. 63 bar
Temperatura d'esercizio	max. 160 °C
Foro	Forma a L
Valori indicativi	Up to 40 °C: 63 bar, 150 °C: 28 bar
Guarnizione	RTFE
Leva manuale	Stainless steel
Rubinetto a sfera	Stainless steel 1.4408



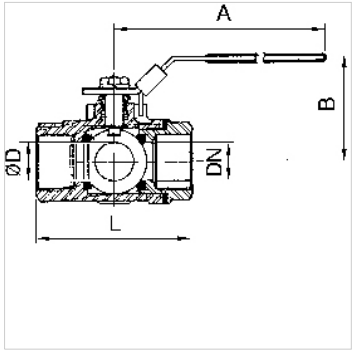

Nota

G thread acc. to DIN EN ISO 228-1, with ISO flange plate (acc. to ISO 5211)
Altri dati su richiesta.

Descrizione

With L-bore, reduced bore. Version for sealing on all sides with integrated ISO flange plate (ISO 5211). The lever can be turned 360° to allow several switching variants.

Avvertenza per l'ordinazione

For use on devices that have to be vented whenever they are turned off, either because of safety regulations or for technical reasons. The pneumatic devices are disconnected from the system and simultaneously vented each time they are shut off.

Informazioni supplementari

G thread acc. DIN EN ISO 228-1

Articolo

Denominazione	DN	Filetto	A (mm)	B (mm)	L (mm)	Ø D (mm)
K- 07 30 15 02	8	G 1/4	114,0	73,0	80,0	11,0
K- 07 30 15 03	10	G 3/8	114,0	73,0	80,0	11,0
K- 07 30 15 04	15	G 1/2	114,0	73,0	80,0	12,5
K- 07 30 15 05	20	G 3/4	133,0	78,0	87,0	16,0
K- 07 30 15 06	25	G 1	133,0	83,0	100,0	20,0
K- 07 30 15 07	32	G 1 1/4	187,0	92,0	123,0	25,0
K- 07 30 15 08	40	G 1 1/2	187,0	98,0	142,0	31,8
K- 07 30 15 09	50	G 2	187,0	126,0	170,0	38,1

Nonostante il più attento esame non si possono escludere eventuali errori ed omissioni, non ci assumiamo alcuna responsabilità per le indicazioni contenute.