K-PRAEZI DRUCKREGL MEM SELU

Precision pressure regulators

Caratteristiche

Pressione d'ingresso	Max. 16 bar
Temperatura del fluido	max. 60 °C
Temperatura ambiente	Max. 60 °C
Mezzi	Micro-filtered, unoiled compressed air (0.01 µm)
Attacco manometro	G 1/8
Materiale di tenuta	NBR
Alloggiamento	Die-cast zinc
Consumo proprio d'aria	2.2 - 4.5 l/min, depending on input pressure and control range



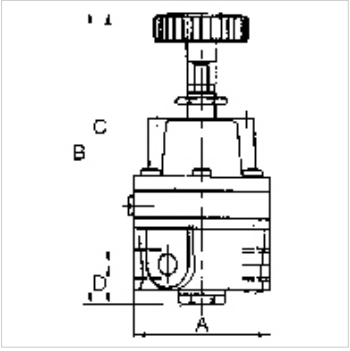

Nota

The given flow rates are based on the following parameters: 450 l/min: P1: 5 bar, P2: 2 bar, Δp ≤ 0.1 bar
570 l/min: P1: 7 bar, P2: 4 bar, Δp ≤ 0.1 bar
Attention! Wear parts kit not supplied! Pressure regulator may only be opened in the factory! 850 l/min: P1: 10 bar, P2: 7 bar, Δp ≤ 0.1 bar.
Altri dati su richiesta.

Descrizione

Diaphragm pressure regulators with self-relieving design for applications requiring an extremely accurate working pressure.

Informazioni supplementari

1500 l/min: P1: 10 bar, P2: 7 bar, Δp ≤ 0.1 bar.

Articolo

Denominazione	Filetto	Intervallo di regolazione	Portata (L/min)	A (mm)	B	C (mm)	D (mm)
K- 07 25 09 43	G 1/4	0.05 - 2 bar	450	58,0	124,0 mm	107,0	17,0
K- 07 25 09 44	G 1/4	0.05 - 4 bar	570	58,0	124,0 mm	107,0	17,0
K- 07 25 09 45	G 1/4	0.05 - 7 bar	850	58,0	124,0 mm	107,0	17,0

Parti di ricambio

K-HALTERBAUSATZ	Holder
K-FILTERELEMENT	Filter element
K-MANO NIPPEL	Nipples for pressure gauges
K-XV AGM 2	Double nipples, parallel male thread

Nonostante il più attento esame non si possono escludere eventuali errori ed omissioni, non ci assumiamo alcuna responsabilità per le indicazioni contenute.