K-DRG VORDRUCK STANDARD

Pressure regulators

HANSA-FLEX

Caratteristiche

Pressione d'ingresso	Max. 16 bar (K-07250336 - K-07250343), max. 25 bar (K-07250344 - K-07250381)
Temperatura del fluido	max. 60 °C
Temperatura ambiente	Max. 80 °C
Materiale di tenuta	NBR
Alloggiamento	Die-cast zinc, painted silver
Misurazione del valore della portata	At P1 = 8 bar, P2 = 6 bar and pressure drop Δp = 1 bar
Altri dati	User manual on request

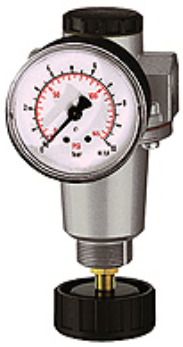

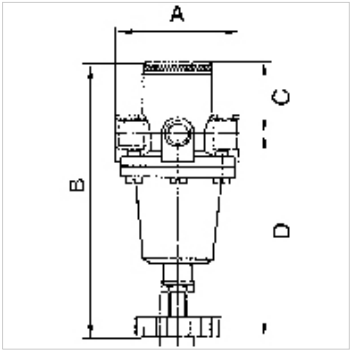

Descrizione

Reversible diaphragm pressure regulators, independent of inlet pressure, with self-relieving design.

Articolo

Denominazione	Filetto	Intervallo di regolazione	Portata (L/min)	A (mm)	B	C (mm)	D (mm)	DN
K- 07 25 03 36	G 1/4	0.5 - 3 bar	1000	54,0	129,5 mm	32,0	97,5	6
K- 07 25 03 37	G 1/4	0.5 - 6 bar	1000	54,0	129,5 mm	32,0	97,5	6
K- 07 25 03 38	G 1/4	0.5 - 10 bar	1000	54,0	129,5 mm	32,0	97,5	6
K- 07 25 03 39	G 1/4	0.5 - 16 bar	1000	54,0	129,5 mm	32,0	97,5	6
K- 07 25 03 40	G 3/8	0.5 - 3 bar	1000	54,0	129,5 mm	32,0	97,5	6
K- 07 25 03 41	G 3/8	0.5 - 6 bar	1000	54,0	129,5 mm	32,0	97,5	6
K- 07 25 03 42	G 3/8	0.5 - 10 bar	1000	54,0	129,5 mm	32,0	97,5	6
K- 07 25 03 43	G 3/8	0.5 - 16 bar	1000	54,0	129,5 mm	32,0	97,5	6
K- 07 25 03 44	G 1/2	0.1 - 3 bar	2200	70,0	145,9 mm	34,0	111,9	15
K- 07 25 03 45	G 1/2	0.5 - 6 bar	2200	70,0	145,9 mm	34,0	111,9	15
K- 07 25 03 46	G 1/2	0.5 - 10 bar	2200	70,0	145,9 mm	34,0	111,9	15
K- 07 25 03 47	G 1/2	0.5 - 16 bar	2200	70,0	145,9 mm	34,0	111,9	15
K- 07 25 03 48	G 3/4	0.1 - 3 bar	5000	90,0	163,4 mm	31,0	132,4	20
K- 07 25 03 49	G 3/4	0.5 - 6 bar	5000	90,0	163,4 mm	31,0	132,4	20
K- 07 25 03 50	G 3/4	0.5 - 10 bar	5000	90,0	163,4 mm	31,0	132,4	20
K- 07 25 03 51	G 3/4	0.5 - 16 bar	5000	90,0	163,4 mm	31,0	132,4	20
K- 07 25 03 52	G 1	0.1 - 3 bar	5000	90,0	163,4 mm	31,0	132,4	25
K- 07 25 03 53	G 1	0.5 - 6 bar	5000	90,0	163,4 mm	31,0	132,4	25
K- 07 25 03 54	G 1	0.5 - 10 bar	5000	90,0	163,4 mm	31,0	132,4	25
K- 07 25 03 55	G 1	0.5 - 16 bar	5000	90,0	163,4 mm	31,0	132,4	25
K- 07 25 03 56	G 1 1/4	0.5 - 3 bar	16500	125,0	252,5 mm	52,0	200,5	25
K- 07 25 03 57	G 1 1/4	0.5 - 10 bar	16500	125,0	252,5 mm	52,0	200,5	25
K- 07 25 03 58	G 1 1/4	0.5 - 16 bar	16500	125,0	252,5 mm	52,0	200,5	25
K- 07 25 03 79	G 1 1/2	0.5 - 3 bar	16500	125,0	252,5 mm	52,0	200,5	35
K- 07 25 03 80	G 1 1/2	0.5 - 10 bar	16500	125,0	252,5 mm	52,0	200,5	35
K- 07 25 03 81	G 1 1/2	0.5 - 16 bar	16500	125,0	252,5 mm	52,0	200,5	35

Parti di ricambio

K-HALTERBAUSATZ STANDARD	Holder
K-VERSCHLEI-SATZ	Set of wearing parts
K-XV AGM MS NI	Double nipples, parallel male thread, nickel-plated brass
K-LOESBARE DOPPELNIPPEL MS	Double nipples

Nonostante il più attento esame non si possono escludere eventuali errori ed omissioni, non ci assumiamo alcuna responsabilità per le indicazioni contenute.