K-FI SPEZI METALLBEHAEL M STANDAD

Special filters with metal bowl and manual drain valve

Caratteristiche

Pressione d'ingresso	Max. 16 bar (polycarbonate bowl / bowl guard), Max. 25 bar (metal bowl)
Temperatura del fluido	max. 50 °C
Temperatura ambiente	Max. 50 °C
Rendimento	99.999 %
Ampiezza dei pori dell'elemento filtrante	0.01 µm
Alloggiamento	Die-cast zinc, painted silver
Misurazione del valore della portata	At P2 = 6 bar and pressure drop Δp = 1 bar



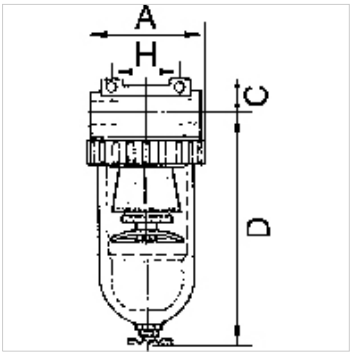

Nota

Altri dati su richiesta.

Descrizione

For all applications with particularly strict compressed air purity requirements. The separating efficiency of these filters permits very fine oil vapour particles and micro-fine suspended particles to be filtered. A standard filter should always be connected upstream to trap coarse impurities and protect the micro-filter inserts.

Articolo

Denominazione	Filetto	Portata (L/min)	A (mm)	C (mm)	D (mm)	H (mm)	DN
K- 07 25 10 74	G 1/4	380	48,0	14,0	133,5	38,0	6
K- 07 25 10 77	G 3/8	380	48,0	14,0	133,5	38,0	6
K- 07 25 10 79	G 3/8	720	70,0	16,0	159,0	50,0	10
K- 07 25 10 81	G 1/2	1250	79,0	18,0	171,0	50,0	15
K- 07 25 10 84	G 3/4	7000	133,0	36,0	206,0	134,0	20
K- 07 25 10 87	G 1	7000	133,0	36,0	206,0	120,0	25

Parti di ricambio

K-HALTERBAUSATZ STANDARD	Holder
K-FILTERELEMENT STANDARD	Filter element
K-SCHUTZKORB G	Protective cage
K-XV AGM MS NI	Double nipples, parallel male thread, nickel-plated brass
K-LOESBARE DOPPELNIPPEL MS	Double nipples

Nonostante il più attento esame non si possono escludere eventuali errori ed omissioni, non ci assumiamo alcuna responsabilità per le indicazioni contenute.