K-WTEH 3-TLG PC H ABLV STANDARD

Service units with polycarbonate bowl and semi-automatic drain valve

Caratteristiche

Pressione d'ingresso	Max. 16 bar (polycarbonate bowl / bowl guard), Max. 25 bar (metal bowl)
Intervallo di regolazione	0.5 to 10 bar (polycarbonate bowl / bowl guard)0.5 to 16 bar (metal bowl)
Temperatura del fluido	max. 60 °C
Temperatura ambiente	Max. 60 °C
Ampiezza dei pori dell'elemento filtrante	5 µm (G 1/4 / G 3/8 / G 1/2), 40 µm (G 3/8 / G 3/4 / G 1 / G 1 1/4 / G 1 1/2)
Materiale di tenuta	NBR
Alloggiamento	Die-cast zinc / Aluminium, painted silver
Contagocce	PA (polycarbonate bowl), Zinc-glass-NBR (metal bowl)
Misurazione del valore della portata	At P1 = 8 bar, P2 = 6 bar and pressure drop Δp = 1 bar
Altri dati	User manual on request



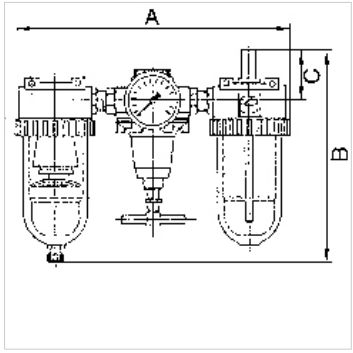

Descrizione

Three-piece service units consisting of a reversible diaphragm pressure regulator, independent of inlet pressure, with self-relieving design, centrifugal separator and proportional lubricator.

Articolo

Denominazione	Filetto	Portata (L/min)	A (mm)	B	C (mm)	DN	Ø manometro
K- 07 25 14 49	G 1/4	600	172,0	182,6 mm	51,0	6	50
K- 07 25 14 56	G 3/8	600	185,0	182,6 mm	51,0	6	50
K- 07 25 14 59	G 3/8	1400	232,0	196,7 mm	51,0	6	50
K- 07 25 14 62	G 1/2	3200	259,0	223,4 mm	55,0	15	63
K- 07 25 14 65	G 3/4	3200	302,0	227,9 mm	58,0	20	63
K- 07 25 14 68	G 1	3200	302,0	227,9 mm	58,0	25	63
K- 07 25 14 71	G 1 1/4	5000	395,0	313,4 mm	70,0	25	63
K- 07 25 14 74	G 1 1/2	5000	395,0	313,4 mm	70,0	35	63

Parti di ricambio

K-HALTERBAUSATZ STANDARD	Holder
K-SCHUTZKORB G	Protective cage
K-VERSCHLEI-SATZ	Set of wearing parts
K-FILTERELEMENT	Filter element
K-TROPFAUFSATZ POLYCARBO	Drip attachment polycarbonate
K-LOESBARE DOPPELNIPPEL MS	Double nipples
K-XV AGM MS NI	Double nipples, parallel male thread, nickel-plated brass
K-RD NIPPEL MS NI	Reducing nipples - nickel-plated brass
K-TROPFAUFSATZ METALL	Drip attachment metal
K-ABLASSVENTIL AUTO	Fully-automatic drain valve with Adapter G 1/8
K-AUTOMAT ABLASSVENTIL	Automatic drain valve

Nonostante il più attento esame non si possono escludere eventuali errori ed omissioni, non ci assumiamo alcuna responsabilità per le indicazioni contenute.