K-DRG DRVS VARIOBLOC

Pressure regulators with pressure supply at both ends

Caratteristiche

Pressione d'ingresso	Max. 25 bar
Temperatura del fluido	max. 50 °C
Temperatura ambiente	Max. 50 °C
Materiale di tenuta	NBR
Calotta elastica	POM-brass
Alloggiamento	Die-cast zinc
Misurazione del valore della portata	At P1 = 10 bar, P2 = 6 bar and pressure drop Δp = 1 bar



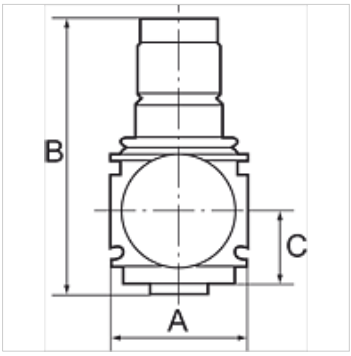

Nota

Altri dati su richiesta.

Descrizione

Diaphragm pressure regulators with self-relieving design for mounting side by side. The pressure setting can be locked by pushing the knob down.
By assembling two or more controllers together, it is possible to supply several working air circuits with different output pressures via a single supply line.

Avvertenza per l'ordinazione

Pressure regulators are also available in lockable version. Please ask for more information.

Articolo

Denominazione	Filetto	Intervallo di regolazione	Portata (L/min)	A (mm)	B	C (mm)
K- 07 25 04 33	G 1/4	0.5 - 6 bar	1800	48,0	98,0 mm	26,0
K- 07 25 04 34	G 1/4	0.5 - 10 bar	1800	48,0	98,0 mm	26,0
K- 07 25 04 35	G 1/4	0.5 - 16 bar	1800	48,0	98,0 mm	26,0
K- 07 25 04 36	G 3/8	0.5 - 6 bar	1800	48,0	98,0 mm	26,0
K- 07 25 04 37	G 3/8	0.5 - 10 bar	1800	48,0	98,0 mm	26,0
K- 07 25 04 38	G 3/8	0.5 - 16 bar	1800	48,0	98,0 mm	26,0

Parti di ricambio

K-VERSCHLEI-SATZ VARIOBLOC	Set of wearing parts

Nonostante il più attento esame non si possono escludere eventuali errori ed omissioni, non ci assumiamo alcuna responsabilità per le indicazioni contenute.