K-HS RD

Unidirectional banjo valves, pneumatic release, port 2 with female thread

Caratteristiche

Pressione di lavoro	0.3 - 10 bar
Pressione di comando	0.5 - 2.5 bar, depending on operating pressure
Temperatura del fluido	max. 60 °C
Inserzione	Any. The ring piece must be positioned before the valve is tightened
Materiale	Ottone nichelato
Materiale di tenuta	Perbunan



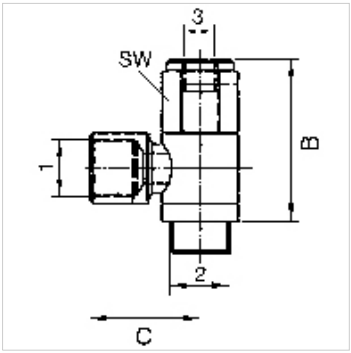

Nota

Altri dati su richiesta.

Descrizione

For stopping and positioning the cylinder movement: If a control signal is present at port 3 (see drawing), air can flow to and from the cylinder. If no control signal is present, the cylinder exhaust air is shut off by the unidirectional valve.
The cylinder is stopped. Releasable unidirectional valves are screwed directly onto the cylinder instead of the normal pipe connections.

Articolo

Denominazione	Port 1	Port 2	Attacco 3	B (mm)	C (mm)
K- 07 15 07 04	G 1/8	G 1/8	M 5	38,0	21,5
K- 07 15 07 03	G 1/4	G 1/4	G 1/8	43,0	25,4
K- 07 15 07 05	G 3/8	G 3/8	G 1/8	46,0	31,6
K- 07 15 07 02	G 1/2	G 1/2	G 1/8	52,0	32,0

Nonostante il più attento esame non si possono escludere eventuali errori ed omissioni, non ci assumiamo alcuna responsabilità per le indicazioni contenute.