K-BKR KL SERIE 374

Ball valves, 374 series

Caratteristiche

Pressione d'esercizio	max. 70 bar (Depending on Temperature)
Temperatura d'esercizio	Max. 150 °C
Guarnizione	PTFE
Leva manuale	Stainless steel 1.4301



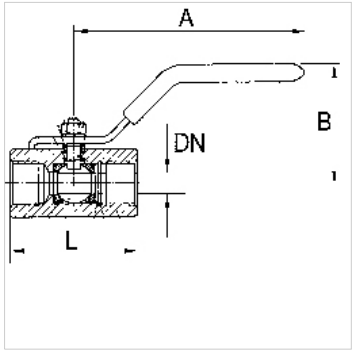

Nota

G thread acc. to DIN EN ISO 228-1, with ISO flange plate (acc. to ISO 5211)
Altri dati su richiesta.

Avvertenza per l'ordinazione

For use on devices that have to be vented whenever they are turned off, either because of safety regulations or for technical reasons. The pneumatic devices are disconnected from the system and simultaneously vented each time they are shut off.

Informazioni supplementari

G thread acc. DIN EN ISO 228-1

Articolo

Denominazione	DN	Filetto	A (mm)	B (mm)	L (mm)	Materiale
K- 07 30 15 32	5	G 1/4	62,0	30,0	47,0	Stainless steel 1.4401/1.4408
K- 07 30 15 33	7	G 3/8	82,0	30,0	51,0	Stainless steel 1.4401/1.4408
K- 07 30 15 34	9	G 1/2	92,0	45,0	64,0	Stainless steel 1.4401/1.4408
K- 07 30 15 35	13	G 3/4	94,0	50,0	68,0	Stainless steel 1.4401/1.4408

Nonostante il più attento esame non si possono escludere eventuali errori ed omissioni, non ci assumiamo alcuna responsabilità per le indicazioni contenute.