K-ZFL ABSP-KLAPPEN DOPPEL

Butterfly valves, with double-acting actuator, min. pilot pressure 5 bar

HANSA-FLEX

Caratteristiche

Tipo	Pneumatic actuators, in double- or single acting version
Pressione d'esercizio	Max. 16 bar
Temperatura d'esercizio	-15 °C to +120 °C
Mezzi	Water / steam, salt water, salt water, ester, ketone, alkali, caustic soda, sodium hydroxide. Not recommended for hydrocarbons
Pressione di comando	5.5 bar
Adattatore valvola	Supplied as standard, operated by a 3/2- or 5/2-way valve
Angolo di rotazione	90 °
Azionamento	aluminium eloxed
Guarnizione azionamento	NBR
Alloggiamento	Grey cast iron GG25 epoxy resin coated, RAL 5015
Guarnizione	EPDM
Albero	SS416
Guarnizione albero	EPDM
Comando	



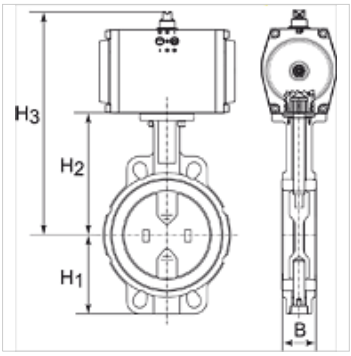

Nota

Altri dati su richiesta.

Articolo

Denominazione	Disco	DN	B (mm)	H1 (mm)	H2 (mm)	H3 (mm)	L (mm)
K- 07 30 03 28	Stainless Steel CF8M/1.4404	40	38,0	68,0	108,0	212,0	94,0
K- 07 30 03 29	Stainless Steel CF8M/1.4404	50	47,0	71,0	143,0	247,0	100,0
K- 07 30 03 30	Stainless Steel CF8M/1.4404	65	49,0	78,0	155,0	259,0	115,0
K- 07 30 03 31	Stainless Steel CF8M/1.4404	80	47,0	89,0	162,0	280,0	127,0
K- 07 30 03 32	Stainless Steel CF8M/1.4404	100	56,0	102,0	178,0	308,0	163,0
K- 07 30 03 33	Stainless Steel CF8M/1.4404	125	59,0	123,0	191,0	321,0	190,0
K- 07 30 03 35	Stainless Steel CF8M/1.4404	150	59,0	138,0	205,0	352,0	216,0

Nonostante il più attento esame non si possono escludere eventuali errori ed omissioni, non ci assumiamo alcuna responsabilità per le indicazioni contenute.