XVN VA
Įsukama srieginė jungtis

HANSA-FLEX

Savybės

1 jungtis	NPT išorinis sriegis
1 sandarinimo forma	sandarinamasis sriegis
2 jungtis	metrinis cilindrinis išorinis sriegis
2 sandarinimo forma	24° vidinis kūgis
Konstrukcija	Įsukama srieginė jungtis
Gaminio forma	tiesus
Norma	DIN 2353 ISO 8434-1
Tiekimo apimtis	Vamzdžio antgalis (be užmetamos veržlės ir pjovimo žiedo)
Medžiaga	nerūdijantysis plienas



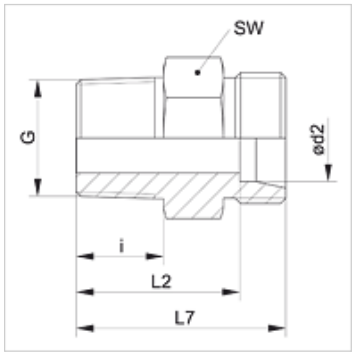

Nuoroda

Nuorodų dėl montavimo, įstatymo, slėginės apkrovos ir leidžiamų darbinių temperatūrų žr. srieginių vamzdžių jungčių techninės informacijos dokumentacijoje.

Prekė

Pavadinimas	Serija	Darbinis slėgis bar	Ø d2 (mm)	G	i (mm)	L2 (mm)	L7 (mm)	SW (mm)
XVN 04 LL VA	LL	PN 100	4	1/8" -27 NPT	10,0	18,0	22,0	11
XVN 06 LL VA	LL	PN 100	6	1/8" -27 NPT	10,0	16,5	22,0	11
XVN 08 LL VA	LL	PN 100	8	1/8" -27 NPT	10,0	18,5	24,0	12
XVN NW 04 HL VA	L	PN 315	6	1/8" -27 NPT	10,0	17,0	24,0	12
XVN NW 04 HL 1/4 VA	L	PN 315	6	1/4" -18 NPT	15,0	23,0	30,0	17
XVN NW 04 HL 3/8 VA	L	PN 315	6	3/8" -18 NPT	15,3	24,0	31,0	19
XVN NW 04 HL 1/2 VA	L	PN 315	6	1/2" -14 NPT	20,0	29,0	36,0	24
XVN NW 06 HL 1/8 VA	L	PN 315	8	1/8" -27 NPT	10,0	18,0	25,0	17
XVN NW 06 HL VA	L	PN 315	8	1/4" -18 NPT	15,0	23,0	30,0	17
XVN NW 06 HL 3/8 VA	L	PN 315	8	3/8" -18 NPT	15,3	24,0	31,0	19
XVN NW 06 HL 1/2 VA	L	PN 315	8	1/2" -14 NPT	20,0	29,0	36,0	24
XVN NW 08 HL 1/8 VA	L	PN 315	10	1/8" -27 NPT	10,0	19,0	26,0	17
XVN NW 08 HL VA	L	PN 315	10	1/4" -18 NPT	15,0	24,0	31,0	17
XVN NW 08 HL 3/8 VA	L	PN 315	10	3/8" -18 NPT	15,3	25,0	32,0	19
XVN NW 08 HL 1/2 VA	L	PN 315	10	1/2" -14 NPT	20,0	30,0	37,0	24
XVN NW 08 HL 3/4 VA	L	PN 315	10	3/4" -14 NPT	20,2	31,0	38,0	27
XVN NW 10 HL 1/8 VA	L	PN 315	12	1/8" -27 NPT	10,0	19,5	26,5	19
XVN NW 10 HL 1/4 VA	L	PN 315	12	1/4" -18 NPT	15,0	25,0	32,0	19
XVN NW 10 HL VA	L	PN 315	12	3/8" -18 NPT	15,3	25,0	32,0	19
XVN NW 10 HL 1/2 VA	L	PN 315	12	1/2" -14 NPT	20,0	30,0	37,0	24
XVN NW 10 HL 3/4 VA	L	PN 315	12	3/4" -14 NPT	20,2	31,0	38,0	27
XVN NW 13 HL 1/4 VA	L	PN 315	15	1/4" -18 NPT	15,0	26,0	33,0	24
XVN NW 13 HL 3/8 VA	L	PN 315	15	3/8" -18 NPT	15,3	26,5	33,5	24
XVN NW 13 HL VA	L	PN 315	15	1/2" -14 NPT	20,0	31,0	38,0	24
XVN NW 13 HL 3/4 VA	L	PN 315	15	3/4" -14 NPT	20,2	32,0	39,0	27
XVN NW 13 HL 1 VA	L	PN 315	15	1" -11,5 NPT	25,0	37,5	44,5	36
XVN NW 16 HL 3/8 VA	L	PN 315	18	3/8" -18 NPT	15,3	27,0	34,5	27
XVN NW 16 HL VA	L	PN 315	18	1/2" -14 NPT	20,0	31,5	39,0	27
XVN NW 16 HL 3/4 VA	L	PN 315	18	3/4" -14 NPT	20,2	31,5	39,0	27
XVN NW 16 HL 1 VA	L	PN 315	18	1" -11,5 NPT	25,0	37,0	44,5	36
XVN NW 20 HL 3/8 VA	L	PN 160	22	3/8" -18 NPT	15,3	29,0	36,5	32
XVN NW 20 HL 1/2 VA	L	PN 160	22	1/2" -14 NPT	20,0	33,5	41,0	32
XVN NW 20 HL VA	L	PN 160	22	3/4" -14 NPT	20,2	33,5	41,0	32
XVN NW 20 HL 1 VA	L	PN 160	22	1" -11,5 NPT	25,0	39,0	46,5	36
XVN NW 20 HL 1 1/4 VA	L	PN 160	22	1.1/4" -11,5 NPT	25,6	41,5	49,0	46
XVN NW 25 HL 1/2 VA	L	PN 160	28	1/2" -14 NPT	20,0	34,5	24,0	41
XVN NW 25 HL 3/4 VA	L	PN 160	28	3/4" -14 NPT	20,2	34,5	42,0	41
XVN NW 25 HL VA	L	PN 160	28	1" -11,5 NPT	25,0	39,5	47,0	41
XVN NW 25 HL 11/4 VA	L	PN 160	28	1.1/4" -11,5 NPT	25,6	41,5	49,0	46
XVN NW 32 HL 3/4 VA	L	PN 160	35	3/4" -14 NPT	20,2	35,0	45,5	46
XVN NW 32 HL 1 VA	L	PN 160	35	1" -11,5 NPT	25,0	40,0	50,5	46
XVN NW 32 HL VA	L	PN 160	35	1.1/4" -11,5 NPT	25,6	40,5	51,0	46

Nepaisant kruopštaus patikrinimo, negalime atmesti klaidų tikimybės, todėl už esamus duomenis neatsakome.

XVN VA
Įsukama srieginė jungtis

HANSA-FLEX

Prekė

Pavadinimas	Serija	Darbinis slėgis bar	Ø d2 (mm)	G	i (mm)	L2 (mm)	L7 (mm)	SW (mm)
XVN NW 32 HL 1 1/2 VA	L	PN 160	35	1.1/2" -11,5 NPT	26,0	42,5	53,0	55
XVN NW 40 HL 1 VA	L	PN 160	42	1" -11,5 NPT	25,0	41,0	52,0	55
XVN NW 40 HL 11/4 VA	L	PN 160	42	1.1/4" -11,5 NPT	25,6	41,5	52,5	55
XVN NW 40 HL VA	L	PN 160	42	1.1/2" -11,5 NPT	26,0	42,0	53,0	55
XVN NW 03 HS 1/8 VA	S	PN 630	6	1/8" -27 NPT	10,0	23,0	30,0	17
XVN NW 03 HS VA	S	PN 630	6	1/4" -18 NPT	15,0	28,0	35,0	17
XVN NW 03 HS 1/2 VA	S	PN 630	6	1/2" -14 NPT	20,0	35,0	42,0	24
XVN NW 03 HS 3/8 VA	S	PN 630	6	3/8" -18 NPT	15,3	28,0	35,0	19
XVN NW 04 HS 1/8 VA	S	PN 630	8	1/8" -27 NPT	10,0	23,0	30,0	17
XVN NW 04 HS 3/8 VA	S	PN 630	8	3/8" -18 NPT	15,3	28,0	35,0	19
XVN NW 04 HS VA	S	PN 630	8	1/4" -18 NPT	15,0	28,0	35,0	17
XVN NW 04 HS 1/2 VA	S	PN 630	8	1/2" -14 NPT	20,0	35,0	42,0	24
XVN NW 06 HS 1/8 VA	S	PN 630	10	1/8" -27 NPT	10,0	22,5	30,0	19
XVN NW 06 HS 1/4 VA	S	PN 630	10	1/4" -18 NPT	15,0	27,5	35,0	19
XVN NW 06 HS VA	S	PN 630	10	3/8" -18 NPT	15,3	27,5	35,0	19
XVN NW 06 HS 1/2 VA	S	PN 400	10	1/2" -14 NPT	20,0	34,5	42,0	24
XVN NW 06 HS 3/4 VA	S	PN 630	10	3/4" -14 NPT	20,2	36,5	44,0	32
XVN NW 08 HS 1/4 VA	S	PN 630	12	1/4" -18 NPT	15,0	29,0	36,5	22
XVN NW 08 HS 3/4 VA	S	PN 630	12	3/4" -14 NPT	20,0	36,5	44,0	32
XVN NW 08 HS VA	S	PN 630	12	3/8" -18 NPT	15,3	29,5	37,0	22
XVN NW 08 HS 1/2 VA	S	PN 630	12	1/2" -14 NPT	20,0	34,5	42,0	24
XVN NW 10 HS 3/8 VA	S	PN 630	14	3/8" -18 NPT	15,3	31,5	39,5	24
XVN NW 10 HS VA	S	PN 630	14	1/2" -14 NPT	20,0	36,0	44,0	24
XVN NW 10 HS 3/4 VA	S	PN 630	14	3/4" -14 NPT	20,2	38,0	46,0	32
XVN NW 10 HS 1 VA	S	PN 630	14	1" -11,5 NPT	25,0	45,0	53,0	41
XVN NW 13 HS VA	S	PN 400	16	1/2" -14 NPT	20,0	35,5	44,0	27
XVN NW 13 HS 3/8 VA	S	PN 400	16	3/8" -18 NPT	15,3	31,0	39,5	27
XVN NW 13 HS 3/4 VA	S	PN 400	16	3/4" -14 NPT	20,2	37,5	46,0	32
XVN NW 13 HS 1 VA	S	PN 400	16	1" -11,5 NPT	25,0	44,5	53,0	41
XVN NW 16 HS 3/8 VA	S	PN 400	20	3/8" -18 NPT	15,3	33,0	43,5	32
XVN NW 16 HS 1/2 VA	S	PN 400	20	1/2" -14 NPT	20,0	37,5	48,0	32
XVN NW 16 HS VA	S	PN 400	20	3/4" -14 NPT	20,2	37,5	48,0	32
XVN NW 16 HS 1 VA	S	PN 400	20	1" -11,5 NPT	25,0	44,5	55,0	41
XVN NW 16 HS 1 1/4 VA	S	PN 400	20	1.1/4" -11,5 NPT	25,6	45,5	56,0	46
XVN NW 20 HS 3/4 VA	S	PN 400	25	3/4" -14 NPT	20,2	40,0	52,0	41
XVN NW 20 HS VA	S	PN 400	25	1" -11,5 NPT	25,0	45,0	57,0	41
XVN NW 20 HS 1/2 VA	S	PN 400	25	1/2" -14 NPT	20,0	40,0	52,0	41
XVN NW 20 HS 1 1/4 VA	S	PN 400	25	1.1/4" -11,5 NPT	25,6	46,0	58,0	46
XVN NW 20 HS 1 1/2 VA	S	PN 400	25	1.1/2" -11,5 NPT	26,0	49,0	61,0	55
XVN NW 25 HS VA	S	PN 400	30	1.1/4" -11,5 NPT	25,6	46,5	60,0	46
XVN NW 25 HS 3/4 VA	S	PN 400	30	3/4" -14 NPT	20,2	41,0	54,5	46
XVN NW 25 HS 1 VA	S	PN 400	30	1" -11,5 NPT	25,0	46,0	59,5	46
XVN NW 25 HS 1 1/2 VA	S	PN 400	30	1.1/2" -11,5 NPT	26,0	49,5	63,0	55
XVN NW 32 HS 1 VA	S	PN 315	38	1" -11,5 NPT	25,0	48,0	64,0	55
XVN NW 32 HS VA	S	PN 315	38	1.1/2" -11,5 NPT	26,0	49,0	65,0	55
XVN NW 32 HS 1 1/4 VA	S	PN 315	38	1.1/4" -11,5 NPT	25,6	48,5	64,5	55

Serija: LL = labai lengvas L = lengvas S = sunkus – PN = nominalusis slėgis PB = maks. darbinis slėgis – Ø d2 = išorinis vamzdžio skersmuo

Gaminių variantai

XVN	Įsukama srieginė jungtis, Plienas
VN VA	Įsukama srieginė jungtis, nerūdijantysis plienas