# W90 HRK HB

Įsukamas antgalis, 90° kampas

## Savybės

| | |
|---|---|
| **1 jungtis** | kūginis BSPT išorinis sriegis |
| **1 sandarinimo forma** | sandarinamasis sriegis |
| **2 jungtis** | cilindrinis BSP išorinis sriegis |
| **2 sandarinimo forma** | 60° vidinis kūgis |
| **Konstrukcija** | Įsukamas antgalis |
| **Gaminio forma** | 90° kampas |
| **Medžiaga** | Plienas |
| **Paviršiaus apsauga** | padengtas galvaniniu būdu |

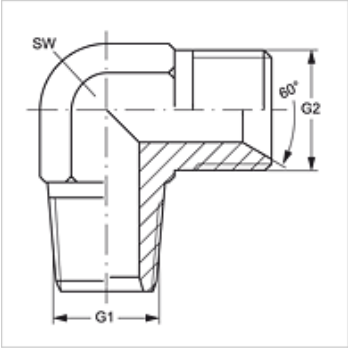


## Prekė

| Pavadinimas | G1 | G2 | SW (mm) |
|---|---|---|---|
| **W90 HRK 02 HB** | R 1/8" K | G 1/8" -28 | 11 |
| **W90 HRK 02 HB 04** | R 1/8" K | G 1/4" -19 | 11 |
| **W90 HRK 04 HB 02** | R 1/4" K | G 1/8" -28 | 14 |
| **W90 HRK 04 HB** | R 1/4" K | G 1/4" -19 | 14 |
| **W90 HRK 04 HB 06** | R 1/4" K | G 3/8" -19 | 14 |
| **W90 HRK 06 HB 04** | R 3/8" K | G 1/4" -19 | 14 |
| **W90 HRK 06 HB** | R 3/8" K | G 3/8" -19 | 17 |
| **W90 HRK 06 HB 08** | R 3/8" K | G 1/2" -14 | 19 |
| **W90 HRK 08 HB 06** | R 1/2" K | G 3/8" -19 | 19 |
| **W90 HRK 08 HB** | R 1/2" K | G 1/2" -14 | 19 |
| **W90 HRK 08 HB 12** | R 1/2" K | G 3/4" -14 | 27 |
| **W90 HRK 12 HB 08** | R 3/4" K | G 1/2" -14 | 27 |
| **W90 HRK 12 HB** | R 3/4" K | G 3/4" -14 | 27 |
| **W90 HRK 12 HB 16** | R 3/4" K | G 1" -11 | 33 |
| **W90 HRK 16 HB 12** | R 1" K | G 3/4" -14 | 33 |
| **W90 HRK 16 HB** | R 1" K | G 1" -11 | 36 |
| **W90 HRK 20 HB** | R 1.1/4" K | G 1.1/4" -11 | 41 |
| **W90 HRK 24 HB** | R 1.1/2" K | G 1.1/2" -11 | 48 |
| **W90 HRK 32 HB** | R 2" K | G 2" -11 | 64 |

SW = rakto dydis

*Nepaisant kruopštaus patikrinimo, negalime atmesti klaidų tikimybės, todėl už esamus duomenis neatsakome.*