GA
Nubraukimo žiedas, GA

Savybės

Konstrukcija	Nubraukimo žiedas
Slydimo greitis max.	0,5 m/s
Temperatūra min.	-30 °C
Temperatūra max.	100 °C
Medžiagos	Mineralinės alyvos Vandeninės emulsijos
Montavimas	įpresuojama į atvirą griovelį
Medžiaga	(1) Mova: plienas (2) Nubraukimo žiedas: 90° Shore A NBR
Panaudojimas	Hidraulika

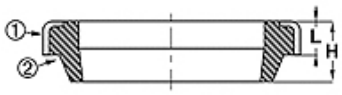

Toleranz / Tolerance		
d	D	L
h11	H8	+0,20 0

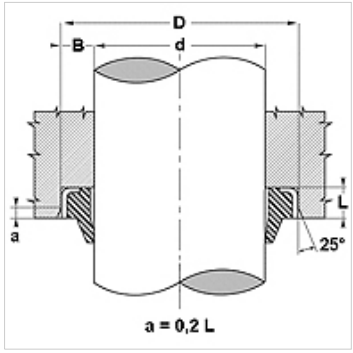

Aprašas

Užima nedaug vietos
purvas neprasiskverbia pro išorinį metalinį žiedą
Paprastas sprendimas.

užsakymo nuorodos

Esant ypatingoms eksploatavimo sąlygoms (skysčio, temperatūros, slėgio ir t. t.) prašome kreiptis į mus.
Gali būti kita medžiaga: FPM.

Prekė

Pavadinimas	d (mm)	D (mm)	D (mm)	L (mm)	H (mm)	Pagal griovelius
GA 10 16-3	10	16,0	-	3,0	4,5	-
GA 10 19-3	10	18,9	-	2,9	5,0	-
GA 10 20-5	10	20,0	-	5,0	8,0	-
GA 12 18-3	12	18,0	-	3,5	5,0	-
GA 12 20-4	12	20,0	-	4,0	6,0	-
GA 12 22-5	12	22,0	-	5,0	8,0	-
GA 14 20-3	14	20,0	-	3,0	4,5	-
GA 14 22-3	14	22,0	-	3,0	4,0	-
GA 16 22-3	16	22,0	-	3,0	4,0	-
GA 16 26-5	16	26,0	-	5,0	8,0	-
GA 18 28-5	18	28,0	-	5,0	7,0	-
GA 18 28-7	18	28,0	-	7,0	10,0	ISO 5597
GA 20 26-3	20	26,0	-	3,5	5,0	-
GA 20 28-3	20	28,0	-	3,5	5,0	-
GA 20 28-5	20	28,0	-	5,0	7,0	-
GA 20 30-4	20	30,0	-	4,0	6,0	-
GA 20 30-5	20	30,0	-	5,0	8,0	-
GA 20 30-7	20	30,0	-	7,0	10,0	ISO 5597
GA 20 35-7	20	35,0	-	7,0	10,0	-
GA 22 28-5	22	28,0	-	5,0	9,0	-
GA 22 30-4	22	30,0	-	4,0	7,0	-
GA 22 32-5	22	32,0	-	5,0	7,0	-
GA 22 32-7	22	32,0	-	7,0	10,0	ISO 5597
GA 22 35-5	22	35,0	-	5,0	8,0	-
GA 25 35-5	25	35,0	-	5,0	8,0	-
GA 25 35-7	25	35,0	-	7,0	10,0	ISO 5597
GA 28 38-5	28	38,0	-	5,0	8,0	-
GA 28 38-7	28	38,0	-	7,0	10,0	-
GA 28 40-7	28	40,0	-	7,0	10,0	-
GA 30 40-5	30	40,0	-	5,0	8,0	-
GA 30 40-7	30	40,0	-	7,0	10,0	-
GA 30 45-5	30	45,0	-	5,0	8,0	-
GA 32 40-4	32	40,0	-	4,0	7,0	-
GA 32 42-5	32	42,0	-	5,0	7,0	-
GA 32 42-7	32	42,0	-	7,0	10,0	-
GA 32 45-4	32	45,0	-	4,0	8,0	-
GA 32 45-7	32	45,0	-	7,0	10,0	-
GA 33 43-5	33	43,0	-	5,0	8,0	-

Nepaisant kruopštaus patikrinimo, negalime atmesti klaidų tikimybės, todėl už esamus duomenis neatsakome.

GA
Nubraukimo žiedas, GA

HANSA-FLEX

Prekė

Pavadinimas	d (mm)	D (mm)	D (mm)	L (mm)	H (mm)	Pagal griovelius
GA 35 45-5	35	45,0	-	5,0	8,0	-
GA 35 45-7	35	45,0	-	7,0	10,0	ISO 5597
GA 35 47-7	35	47,0	-	7,0	10,0	-
GA 36 45-7	36	45,0	-	7,0	10,0	-
GA 36 46-5	36	46,0	-	5,0	8,0	-
GA 3747 - 5	37	-	47	5,0	-	-
GA 38 48-7	38	48,0	-	7,0	10,0	-
GA 40 50-5	40	50,0	-	5,0	8,0	-
GA 40 50-7	40	50,0	-	7,0	10,0	ISO 5597
GA 40 52-5	40	52,0	-	5,0	8,0	-
GA 42 52-7	42	52,0	-	7,0	10,0	-
GA 45 55-7	45	55,0	-	7,0	10,0	ISO 5597
GA 45 60-7	45	60,0	-	7,0	10,0	-
GA 48 60-7	48	60,0	-	7,0	10,0	-
GA 50 56-5	50	56,0	-	5,0	8,0	-
GA 50 60-5	50	60,0	-	5,0	8,0	-
GA 50 60-7	50	60,0	-	7,0	10,0	ISO 5597
GA 50 65-5	50	65,0	-	5,0	8,0	-
GA 50 65-7	50	65,0	-	7,0	10,0	-
GA 52 62-7	52	62,0	-	7,0	10,0	-
GA 55 63-7	55	63,0	-	7,0	10,0	-
GA 55 65-7	55	65,0	-	7,0	10,0	-
GA 55 70-7	55	70,0	-	7,0	10,0	-
GA 55 80-5	55	80,0	-	5,0	8,0	-
GA 56 65-7	56	65,0	-	7,0	10,0	-
GA 56 66-5	56	66,0	-	5,0	8,0	-
GA 56 66-7	56	66,0	-	7,0	10,0	ISO 5597
GA 60 70-5	60	70,0	-	5,0	7,0	-
GA 60 70-7	60	70,0	-	7,0	10,0	-
GA 60 74-5	60	74,0	-	5,0	8,0	-
GA 60 75-7	60	75,0	-	7,0	10,0	-
GA 63 75-7	63	75,0	-	7,0	10,0	-
GA 63 83-5	63	83,0	-	5,0	8,0	-
GA 65 75-7	65	75,0	-	7,0	10,0	-
GA 70 80-5	70	80,0	-	5,0	7,0	-
GA 70 80-7	70	80,0	-	7,0	10,0	ISO 5597
GA 75 85-7	75	85,0	-	7,0	10,0	-
GA 75 87-5	75	87,0	-	5,0	7,0	-
GA 80 90-7	80	90,0	-	7,0	10,0	ISO 5597
GA 85 95-7	85	95,0	-	7,0	10,0	-
GA 90 100-5	90	100,0	-	5,0	7,0	-
GA 90 100-7	90	100,0	-	7,0	10,0	ISO 5597
GA 95 105-7	95	105,0	-	7,0	10,0	-
GA 100 110-5	100	110,0	-	5,0	7,0	-
GA 100 110-7	100	110,0	-	7,0	10,0	-
GA 105 115-7	105	115,0	-	7,0	10,0	-
GA 110 120-7	110	120,0	-	7,0	10,0	-
GA 115 125-7	115	125,0	-	7,0	10,0	-
GA 120 130-7	120	130,0	-	7,0	10,0	-
GA 125 140-7	125	140,0	-	7,0	10,0	-
GA 125 140-9	125	140,0	-	9,0	12,0	ISO 5597
GA 130 145-9	130	145,0	-	9,0	12,0	-
GA 135 145-7	135	145,0	-	7,0	10,0	-
GA 135 150-9	135	150,0	-	9,0	12,0	-
GA 140 150-7	140	150,0	-	7,0	10,0	-
GA 140 155-9	140	155,0	-	9,0	12,0	ISO 5597
GA 150 165-9	150	165,0	-	9,0	12,0	-
GA 160 175-9	160	175,0	-	9,0	12,0	ISO 5597
GA 170 185-10	170	185,0	-	10,0	14,0	-
GA 180 195-10	180	195,0	-	10,0	14,0	-
GA 200 220-12	200	220,0	-	12,0	16,0	-