K-3 BKR L VA

3-way ball valves, L-bore

Savybės

Darbinis slėgis	max. 63 bar
Darbinė temperatūra	max. 160 °C
Kiaurymė	„L“ formos
Orientacinės reikšmės	Up to 40 °C: 63 bar, 150 °C: 28 bar
Tarpiklis	RTFE
Rankinė svirtis	Stainless steel
Rutulinis vožtuvas	Stainless steel 1.4408



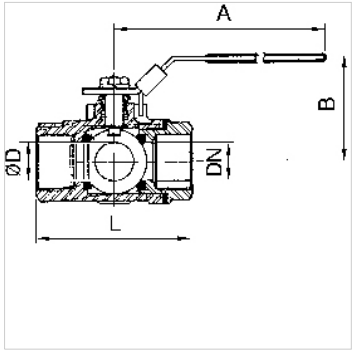

Nuoroda

G thread acc. to DIN EN ISO 228-1, with ISO flange plate (acc. to ISO 5211)
Daugiau duomenų pagal užklausimą.

Aprašas

With L-bore, reduced bore. Version for sealing on all sides with integrated ISO flange plate (ISO 5211). The lever can be turned 360° to allow several switching variants.

užsakymo nuorodos

For use on devices that have to be vented whenever they are turned off, either because of safety regulations or for technical reasons. The pneumatic devices are disconnected from the system and simultaneously vented each time they are shut off.

Papildoma informacija

G thread acc. DIN EN ISO 228-1

Prekė

Pavadinimas	DN	Sriegis	A (mm)	B (mm)	L (mm)	Ø D (mm)
K- 07 30 15 02	8	G 1/4	114,0	73,0	80,0	11,0
K- 07 30 15 03	10	G 3/8	114,0	73,0	80,0	11,0
K- 07 30 15 04	15	G 1/2	114,0	73,0	80,0	12,5
K- 07 30 15 05	20	G 3/4	133,0	78,0	87,0	16,0
K- 07 30 15 06	25	G 1	133,0	83,0	100,0	20,0
K- 07 30 15 07	32	G 1 1/4	187,0	92,0	123,0	25,0
K- 07 30 15 08	40	G 1 1/2	187,0	98,0	142,0	31,8
K- 07 30 15 09	50	G 2	187,0	126,0	170,0	38,1